LE BEAU MONDE,

AND

MONTHLY REGISTER,

NOVEMBER, 1809.

EMBELLISHMENTS:

1 HINDOOSTAN LADY,
2 ELECTRICITY,
3 MUSIC,
4 BOTANICAL PLATE,
5 A NEW CARRIAGE,
6 LADY and CHILD,

LITERATURE.

ORIGINAL COMMUNICATIONS.

	Page
Memoir of the late Mr. Boulton,	69
On the Character and Capacity of the Asiatics, particularly of the Natives of Hindoostan,	74
Letter, on the Subject of Tides	76
On the Thyrde Boke of Machabees	77
Improvements in Conductors of Electricity, and insulating power; by Mr. Hallpike	78
Report of the Nature and Progress of the Glasgow Astronomical Society,	79
Alphonso; or, the Natural Son	87

REVIEW OF WORKS OF ART.

Exhibition of the Water Colour Society, in New Bond Street.

	Page
Green's Quoit-Players;	93
— Cottage Children; Gadshill and Carriers; Entrance Gate of Allington Church; Portrait of Major Sibthorp; Portraits of Captain Patterson and Family; Ditto of Charles Mainwaring, Esq. and Lord Monson,	94
Hewlett's Gleaners,	*ibid*
Craig's Flowers	*ibid*
Holmes's Mischievous Boys taking a Swan's Egg; a Peasant smoaking; the Dead Lamb; Portraits of two Ladies	95
Huet Villiers's Landscape; Old Oak in Oatlands Park; Hebe; Portrait of the Countess Hawarden; La Nouvelle Lune; Aurora; Portrait of a Lady of Quality; &c.	*ibid*
Kenyon's Cattle Piece, &c.	*ibid*
Laporte's View of Peterborough	*ibid*
Leschallas's Pictures	96
Nash's Westminster Abbey Church; Choir of Canterbury Cathedral; Interior of Launceston Priory,	*ibid*

CATALOGUE RAISONNEE.

Poetry.

The Pastoral Care; a Didactic Poem	97
Ronald, a Legendary Tale,	*ibid*
The Battles of Talavera,	*ibid*
Poems, by Sir John Carr,	*ibid*

Dramatic.

Grieving's a Folly; a Comedy,	100
Venoni, or, the Novice of St. Mark's,	*ibid*
The Foundling of the Forest,	101
The Abdication of Ferdinand, or, Napoleon at Bayonne,	*ibid*

Books of Art.

Religious Emblems,	*ibid*
Seventy-eight Studies from Nature,	102

Voyages and Travels.

Travels through Denmark and Part of Sweden, by James Macdonald,	*ibid*

Miscellaneous.

Fungusiana,	103
Green-Room Gossip,	104

CONTENTS OF THE EIGHTH NUMBER.

CATALOGUE OF NEW MUSIC.

Page

Beethoven's Grand Sinfonie, in C, arranged for two performers on the Piano Forte, by Brugier, *ibid*
Up all Night; or, The Smugglers' Cave; an Opera, *ibid*
Instructions for the Flute, by Monzani, 105
The Jubilee; a Song, by Lanza, *ibid*
A Duett Concertante for the Piano Forte and Violin, by Fiorillo, 106
The Thrush, a Rondo, by Parry, *ibid*
Ah se m'Adora, by Sieur Mayer *ibid*
L'Incanto; Serenade, by Corri *ibid*
The Boon of Bacchus; a Glee, *ibid*
Sul Margine d'un Rio; by Lanza, 107
Dammi la cara Mano; by Puchitta, *ibid*
Complete Preludist for the Piano Forte, by Jansen, *ibid*
Two Sonatas for the Piano Forte, by Ling, *ibid*
The Maid whose Heart was cold to Love; a Ballad, by Sir J. Stevenson, *ibid*
If then, to love thee be offence; ditto, *ibid*
The Day of Love; by Moore, *ibid*
Fanny, dearest; a Ballad, by ditto, 108
Sweet is the tear; Canzonet, by Staes, *ib.*
My Lodging is on the cold Ground; by Corri, *ibid*
Three favourite Pandean Airs, arranged for Piano Forte and Flageolet, by Corri, *ibid*
The Prayer of our Saviour, *ibid*
The Singing Girl; a Ballad, by Rhodes, *ib.*
The Battle of Corunna; a Song, by Dibdin, *ibid*
Viotti's three Trios, arranged as Sonatas for the Piano Forte, by Dussek, 109
Lieber Augustine; by Holden *ibid*
Toujours Gai; a Rondo, by Dale, *ibid*
Marianna; an Air, with Variations, for the German Flute and Piano Forte, by Howship, *ibid*

Page

La Jeunesse; a Divertimento for the Piano Forte, by King 109
Who would ever courts pursue? a Canzonet, by Staes, *ibid*
The Pride of the Valley; a Song, by Holst, 110
No I, of the Vocal Works of Handel, arranged by Dr. Clarke, *ibid*
A Selection of Irish Melodies, with Symphonies by Sir J. Stevenson, 111
Vocal Harmony, Volumes I and II, 113
Thine am I, my faithful Fair; a Canzonet, by Whittaker, 115
The Collier's Windlass; by Emery *ibid*

BOTANY. 117

POETRY.

Lines written on viewing Westminster Abbey, 118
Fragment, translated from the German, 119
Epitaph on Dr. Bennett, *ibid*
Ode to Harmony, 120

SUMMARY OF POLITICS. 121

THEATRICALS. 127

Remarks on Covent Garden Theatre—The Lyceum—Not at Home—Man and Wife—Mr. Wrench—Mrs. Edwin

Description of a new Carriage, 132

AGRICULTURAL REPORT. 133

COSTUME. 137

MEDICAL REPORT. 139

LE BEAU MONDE,

AND

MONTHLY REGISTER,

FOR NOVEMBER, 1809.

THE EIGHTH NUMBER.

ORIGINAL COMMUNICATIONS.

BIOGRAPHICAL SKETCH OF THE LATE MR. BOULTON.

To the Editor of Le Beau Monde, and Monthly Register.

SIR,

A man of the late Mr. Boulton's celebrity and attainments—a man, who for so long a period has occupied a considerable degree of public notice, from his intimate connexion with the arts, the sciences, and the manufactures of this country—such a man will scarcely be permitted to retire from the great stage of life unnoticed and unobserved; he will not be permitted to sink into silence and obscurity like a common person, but his virtues, his talents, and his successful exertions of both, will be held up to posterity, not for their admiration only, but for their imitation. It is thus the venerable dead become useful monitors to the living. I understand that some gentlemen, well acquainted with Mr. Boulton, are employed in writing an account of his life. It will embrace a new æra in the scientific and manufacturing world. The human mind has made great and important stretches during the period of his existence, and there are few of the discoveries which have been made, that are not either directly or remotely connected with a history of his life. I am anxious, Mr. Editor, through the medium of your scientific Miscellany, to contribute my share towards this design; and although my contributions may not in themselves be of importance, they may at least be useful to those who are collecting materials for this purpose: as such I send them, and you may rely upon their authenticity. They are rather detached, miscellaneous scraps, than regular details; and if you will excuse my desultory style and manner, I shall perhaps trouble you again.

Mr. Boulton has often been spoken of, by his Reverend tutor, in the neighbourhood of Birmingham, while a boy, as a youth of the most generous temper, conciliatory manners, and open character. Indeed, the seeds of what more eminently developed itself in the character of the man, were not a little conspicuous in the magnanimous temperament of puerile years. The father of Mr. Boulton had made considerable progress in those ma-

nufactures which have distinguished Birmingham by the name of the "*Toy-Shop of Europe;*" and some have attributed the invention of an ingenious mode of inlaying steel (at that time a considerable desideratum in the manufacture of articles both of fancy and utility, in the district of his birth) to Mr. Boulton.

Birmingham was by no means calculated to afford the scope requisite for the completion of the extensive and patriotic views of the active and philosophic mind of Mr. Boulton. In 1761, he treated for the *common right* of Soho, the name of his present mansion and extensive factories, which, though then a barren heath, was speedily converted, by his transmuting hand, into a cultivated scene; the seat of art, taste, genius, and worth. Mr. *Eggington*, so eminent for his stained glass, was patronized by Mr. Boulton, who built a house on purpose for him near his own. In the laboratory of operations, Mr. Boulton was not merely a very constant attendant, but often acted as director of the secret processes, being well acquainted himself not only with the rich treasures of art, but also master of whatever had been written on the respective subjects which he patronized; and when much less was known of the works of learned foreigners than even the difficulties of the present times allow, it was no unusual thing with Mr. Boulton to have translations made of entire volumes, for his own private use, on particular subjects, and not unfrequently at great expense. A remarkable instance of this is within the writer's knowledge. The Swedes are eminent for the excellence of their iron, which, when pure, ought to be considered as the most valuable of metals. The celebrated *Rinmann* published long ago a treatise on this important subject, which has never yet appeared in an English dress, except for Mr. Boulton's own use. There is, however, little doubt but that the iron-masters of Great Britain and Wales would be exceedingly glad to profit by a translation made so faithfully, and doubtless enriched with luminous notes on the same subject, by so able a hand. We hope to see it carefully edited hereafter.

We recollect to have observed many peculiarities in Mr. Boulton, but they were the peculiarities of a mind formed in no common mould. It was no unusual thing (long before the doctrines of the celebrated craniologist Gall had been ushered with such an air of novelty to the public) for Mr. Boulton, when visited by a guest of talent, previous to his departure from Soho to try whether the hat of the stranger would fit his own head; and this was always so gracefully managed, as to give the party an idea of the most flattering respect. What were his peculiar notions on physiognomy, or whether he had studied *Lavater* or *De Sue*, we have yet to learn.

We do not wonder at Mr. Boulton's anxiety to live, when we consider the numerous and honourable attachments which connected him with the world, the applause which his discoveries had attained, added to the wide circulation of his improvements in every part of the civilized world. Living, as he did, in the bosom of a circle, most of whom he had fostered, many of whom he had led to wealth, and to all of whom he had been, by his bounty and philanthropy, more than a father, is it reasonable to suppose that he could willingly relinquish, or rather contemplate, the termination of earthly association with the objects of his care?—When that exquisite artist, Mr. *William Sharpe*, brought home the engraving of Boulton, finished in the finest style of his art, and a correct transcript of the faithful copy of his features painted by Sir W. Beechy—after acknowledging the powers and ability of the artist, he exclaimed, with some little emotion, better to be imagined than described—"*'Tis well, but still it is only the picture of an old man.*"

In consequence of the elucidations of the doctrine of latent heat, (the caloric of the neologists of modern chemists,) by the celebrated Dr. Black, then professor of chemistry in the university of Glasgow, Mr. Watt, the favourite pupil of that professor, and the companion of his experiments, projected some material improvements in the steam-engine. The most perfect engines

had hitherto been constructed by Mr. Savary, from the hints left in a *Century of Inventions*, by the Marquis of Worcester. About the same period, Mr. Boulton's attention had been occupied in making improvements of a similar nature; he therefore sought out Mr. Watt, and, fortunately for both, induced that gentleman to settle at the Soho, where he soon became, at the same time, his partner and most intimate friend. But what appears most singular is, that this machine, so valuable, so astonishingly perfect, and so comparatively economical, should, like a prophet, meet with no honour in its own country; and we state, on the authority of Mr. Boulton himself, that Messrs. Watt and Co.'s improvements and patent had been almost everywhere adopted but in the place where the greatest occasion for it existed, and which afforded the greatest opportunity of witnessing its vast superiority. Not an improved engine, on Mess. Watt and Co.'s plan, was to be found within several miles of Birmingham, in the year 1800, except in his own works.

Mr. Boulton gave his fullest support and patronage to men of science, for whom, next to the sciences themselves, his attentions manifested his great regard. It is well known that the Chemical and Philosophical Society of Birmingham owed its formation, and in some measure its extent, to the series of scientific Lectures on Philosophical Chemistry and the Arts, to Dr. Stancliffe, whose Course had been invited and eminently patronized by this great man, in the year 1800. This was about the time when the subject of Galvanism had begun to excite vast attention, and to open the avenue to that splendid prospect which has since been so obvious to its distinguished votaries. Mr. Boulton had never seen any experiments with the voltäic pile, the account of whose powers had been recently communicated from *Como* to the President of the Royal Society of London. Mr. Boulton fixed a day for repeating the experiments, and Dr. Stancliffe presented an apparatus, consisting of discs of zinc and copper of the size of common playing-cards, and in number about the same as a common pack: these discs of zinc were rolled out by Mr. Phipson jun. (an ingenious experimenter and amateur of chemistry,) at his flatting-mills, and were the first specimens of this brittle metal having been laminated in a state of purity; though, since that time, Mr. Charles Sylvester, of Sheffield, drew it out into wire of considerable flexibility. Wire was not wanted for the experiments alluded to, but on many accounts extension of surface was desirable; nor was it then known that extent of surface was connected with deflagration; while intensity of shock seemed to depend on the numbers of successive series. When the pack (for from want of height it could not be called a column or pile, the ordinary term) was built of alternate strata of zinc, copper, and sippets of the same size of cloth steeped in diluted saline solutions, and when a fine steel wire was made to connect the negative and positive poles of the pile, a beautiful cluster of vividly red corruscations were furnished, which had never been before witnessed by any of the parties present, and which, when the experiment was made in the midst of a vivid gleam of sunshine, were still eminently distinguishable. The instant Mr. Boulton beheld the effect, though he had not been before by any means indifferent to the unexpected result, he exclaimed, "Dr. Stancliffe, *you have astonished me for the third time in my life: Dr. Franklin did so twice formerly, when he for the first time exhibited to me the electric spark; and secondly, when he disarmed the clouds by his electric kite!!!*"

Another circumstance, intimately connected with the former, we may at the same time mention, as highly creditable to the love borne the sciences by this eminent amateur of all that contributed either to utility or taste.

Marking the superiority of surface or area over solidity or series, in the deflagration of the different metals, and it having been stated, by writers on metallic electricity, (as it had been termed,) that any two differently acidifiable metals would answer, though not to the same extent, as when zinc and silver, zinc and gold, zinc and platina, or zinc and almost any other metal

were used; Dr. Stancliffe suggested to Mr. Boulton, that it was within his power readily to try the effect of large plates of silver and copper. Sheets were furnished for the purpose, at least to the number of of 20 series, containing about 800 inches square of surface in each. Blankets were cut into squares of the size of the metals, and saturated solutions of salt and water were employed. Many members of the Lunar Society, so celebrated in the days of Darwin and Priestley, in whose train were a Keir, a Watt, a Galton, and the subject of our narrative, were present, and expected a considerable effect. The fabric was reared with a sort of religious enthusiasm. No one would (after what had happened) have been surprized, had a fatal blow been given to the architect! But a much greater power was presented by the same number of series of discs of zinc and copper of the size of common playing-cards, after the manner already stated. Though it is very probable, that in making the experiment every advantage was far from being had, it is to be lamented that we have not any proof on record as to what would have been effected, both in the way of deflagrating power, and ability to give shock, when an equal quantity of surface and number of series were employed of the same metals, (siver and copper,) distributed after the present fashion, in troughs or batteries. Indeed, the power to give shock was thought at that time the test of all other *electro-galvanic* power, and no chemical experiments were made to ascertain the power of this pile. The incumbent pressure of the superior strata was an obstacle, perhaps, of much moment, which would have been, however, obviated, had the different metals been distributed in a galvanic battery, after the manner now accomplished with troughs. We would invite more attention to this point upon a larger scale than has yet been paid, though the object be of less importance than it was at the period to which we allude, 1800, when it was reckoned, even at Birmingham and the Soho, (so skilled in the metalliferous arts,) a variety of no common kind, to see zinc laminated to a considerable extent. It it probable, however, that there is a temperature at which all the metals may become manageable in this way; but probably a nice attention to temperature and equable pressure, as well as to the particular internal arrangement of the particles of the metal, must be paid.

The inconveniencies attending the piling large surfaces of metals to construct a galvanic column, were no sooner obvious, than they were, upon a small scale at least, obviated; for in the course of a week, one of the principal directors of the experiments carried to Mr. Keir's a galvanic trough, of five feet long, and exhibited all the then known experiments at his house at Hill-Top, in the presence of Mr. Keir's son-in-law, the present Mr. Moillette of Birmingham, late of Geneva, and others, to the great delight of all present. This was before the trough of Mr. Cruikshank had been made public, though there is no doubt of that gentleman being also the inventor of the galvanic trough; yet it is certain the parties had no communication with each other, direct or indirect. How much Mr. Keir was gratified on this occasion, it is needless for us to say: every one who knows this skilful, amiable, and profoundly scientific character, may imagine it in a degree. On account of the length of the trough, as thus constructed, various devices were hit upon to remedy its inconvenience; the form of a draft-board, with suitable compartments and troughlets, was judged the best adapted, and executed. The galvanic experiments referred to in Dr. Priestley's last communications * from America, and which have been published in Mr. Nicholson's Journal, uphold the phlogistic doctrines with the steadiness peculiar to this singularly compound character. These experiments were made with a galvanic pack sent him, of the first zinc plates ever rolled

* In one of his last communications from America to a scientific friend at Birmingham, lamenting the difficulty of getting at any necessary or novel apparatus, he says, "*I am in a land where nothing is cheap but charcoal.*"

out, as a present from Mr. Phipson, before alluded to.

It was the great wish of Mr. Boulton that this valuable experimenter should have returned, and spent his days in the bosom of that Society (the Lunar) of which he was so luminous a member: indeed it may be asserted, and ought to be known, that almost all his experiments were communicated to that learned and scientific body, and their accuracy ascertained, before the public, or even the friends of science at a distance, were acquainted with them. He did not return, doubtless fearing the consequences of a second exposure to an infuriated mob, whose profligate example will be recollected so long as the ruins of their ill-guided enthusiasm shall leave a wreck behind; even until "*perierunt ruinæ*."—Mr. Boulton was asked, in a letter from Dr. Priestley, for a few thermometers, having different scales, finding much difficulty in this respect, in the new world. Mr. Boulton, in return, sent him 2000, many of which were complete, and of the most curious kind: the principal part were merely tubes, to which scales had not been adapted, or which were ungraduated.

It was the custom of the Lunar Society to meet on the first Monday of every lunar month, whence its name. This Society was not only open to learned aliens, no matter from what quarter, but was well attended by its own members, who resided, (at least several of them, as Dr. Darwin, &c.) at considerable, and, one would imagine, very inconvenient distances. These obstacles were, however, seldom complained of, and the meetings were always very respectably attended. On some occasions, men were admitted whom we should have thought, on the first insertion of their names, would have been excluded. A singular instance of this kind may be mentioned.

Breslaw, the celebrated juggler, had been, in the latter period of his career, exhibiting his tricks at Birmingham, many of which being of a philosophical nature, or depending for their solution upon physical or chemical principles, reasonably enough called the attention of our Society. The conjuror puzzled the whole of its members with one trick, which, after various attempts and trials, they did not, could not, contrive the means of overcoming. At length they entered into an agreement to make a purse of 20 guineas for Breslaw, on condition that he pointed out his method. This was accepted, and the explanation given, to the no small merriment of one branch of the Society at the expense of the other.

The experiment of Mr. Breslaw to which we allude was an ingenious contrivance, by means of which a piece of wood of twice the dimensions of an aperture previously cut in another piece of wood, was made to pass through this aperture—How to get the apple in? *that is the question.* It is notorious that in the dock-yards at Plymouth, Portsmouth, and other places, timber is softened by various methods, but principally by long digestion in coffins or suitable boilers, supplied with steam or boiling water. After being digested for a certain period, even large pieces of timber may be completely bent, and adapted to almost any form that may be necessary. This has been found particularly useful in the cramping pieces, and the knees of vessels. A piece of wood digested in this manner admits of a considerable degree of compression, to the extent of almost half its original volume. By the application of these means, Mr. Breslaw was enabled to pass the larger piece through the smaller aperture. This being effected, the piece of wood soon recovers its original size, except in that part which is compressed by the sides of the aperture through which it has been passed.

ON THE CHARACTER AND CAPACITY OF THE ASIATICS, PARTICULARLY OF THE NATIVES OF HINDOOSTAN.

BY MR. W. B. MARTIN.

(Published by Order of a Council of the College of Fort William, in India.)

TO ascertain with precision, and define with accuracy, the character of any people, it is necessary that we first investigate the spirit of their laws, the nature of their government, and the frame of their religion. These are causes so powerful in their operation, and determinate in their influence on the mind of man, that the aggregate exercise of vice and virtue will, almost invariably, be found to bear an exact proportion to the degree of good and evil predominant in each.

The mischievous effects of arbitrary power have been so frequently inveighed against, with all the pomp of rhetoric, and all the energy of truth, that little remains either for addition or embellishment. Slavery and oppression, vice and ignorance, tyranny and persecution, have been shewn to be attendants on a lawless and despotic sway. These, forming an artful combination of mutual support, have gradually coalesced into a mass, indurated by time, and fortified by prejudice, which the desultory and disunited efforts of virtue and of freedom have vainly laboured to dissolve. The effects of this, though operating of itself, and void of any stronger impulse, must prove hostile to the general diffusion of knowledge, and epidemical increase of virtue. But, when ambition fires the mind of the man who concenters in himself such absolute and unrestrained authority; who would acquire glory at the expense of humanity, and who desires only slaves and worshippers; then will his subjects be made to drink the bitterest cup of human misery. The victorious progress of Mohummud, the exploits of Aurungzeeb and Timour, furnish adequate examples of the above assertion. The misery which pursued their steps, and the havock which accompanied their progress, are too notorious to need mention here.

Such, then, is the species of government which has generally prevailed among all Eastern nations; and we may trace its consequences in that want of all the sterner virtues, that total suppression of all strength of sentiment, that abject servitude, and that decay of genius, which so eminently characterise the natives of the East. Their laws will naturally be framed in such a manner as to support their principles of rule; they will (and we find they actually do) inculcate a most servile obedience, and unqualified submission, to be their first and greatest duties: but when we turn to their religion, and find a compound of tyranny and priestcraft, nicely interwoven by the dexterous hand of fraud, injustice, and oppression; when we find many of its precepts subversive of society, and destructive to its happiness; when we evidently see traces of cruelty and blood, though coloured with some specious appearance of virtue, and tinctured with some slight infusions of morality; we cannot but conclude, that such a people are destitute of most of the qualities that adorn, and are in possession of many of the vices that degrade, humanity.

The indolence of Oriental nations, and the despotism to which they have been usually subjected, are generally ascribed to the heat of the climate, which enervates the vigour both of mind and body: but this does not hold universally. The character of nations depends not merely on the climate, but also on the nature of their government and religion, their progress in refinement, improvement in knowledge, and various other circumstances. The causes, says an ingenious writer, which suspend the progress

A LADY of HINDOOSTAN.

London Published for the Proprietors by Bell & De Camp Catharine St. Strand.

and diffu
ate, but
jealousy
Regar
Hindoos
almost u
generally
less, inof
ed nothi
lence to
rankled
and crue
cence, a
But stub
ideas. T
been kn
luted alt
whose c
not endu
been fon
of meek
be the r
and ever
Of all
ture, cru
time, th
passions
to excite
alone se
discernib
age, it f
ments to
characte
Romans
cast of
may be
foreign
were so
we say
Hindoos
indiffere
crificed
fidious
ture of
can see,
on the p
hear, w
unavaili
prey to
insects
which

and diffusion of truth, arise, not from climate, but from the watchful and intolerant jealousy of despotic sovereigns.

Regarding the character of the natives of Hindoostan, very erroneous opinions have almost universally prevailed. They have generally been represented as a mild, harmless, inoffensive race; whose religion breathed nothing but the most enlarged benevolence to all mankind; whose breasts never rankled with the fiercer passions of revenge and cruelty; who led their lives in innocence, and all whose paths were peace. But stubborn facts confute such flattering ideas. Thousands of human victims have been known annually to smoke on the polluted altars of their horrid deities—deities, whose crimes, if upon earth, society could not endure; and those bosoms, which have been fondly imagined the asylums of love, of meekness, and humanity, are found to be the receptacles of every debasing crime, and every malignant passion!

Of all the vices incident to human nature, cruelty is the worst, and at the same time, the most unaccountable. All other passions rise in the mind from objects proper to excite them; but of sush objects, cruelty alone seems destitute; and from its being discernible even in children of the tenderest age, it furnishes one of the strongest arguments to the natural depravity of our fallen character. The general propensity of the Romans to this vice, so visible in the savage cast of their recreations and amusements, may be accounted for from the numerous foreign and domestic wars in which they were so constantly engaged. But what shall we say to the mild, the gentle, the humane Hindoos, who, with careless levity, or calm indifference, can view a fellow-creature sacrificed by the murderous hand of some perfidious Brahmin, and writhing under the torture of a painful and protracted death? who can see, with unconcern, the widow burning on the pile with her departed husband, and hear, without remorse, the helpless infant's unavailing cries, left to perish on a tree, a prey to ravenous birds, and to devouring insects? Such are the fruits of a religion, which has been supposed to breathe a spirit of the purest love, the most enlarged benevolence, the most enlightened charity.

If we examine into the capacity peculiar to the Asiaticks, we shall find them to possess a larger portion of ability than is generally supposed. Indeed we have every reason to suppose, that the sun of science, as well as of revelation, first arose upon the Eastern world; and that the polished nations of Europe, who now excel antiquity in arts, and vie with it in arms, are indebted to Asia for their cultivation, and many of their best attainments. The Asiaticks, it is probable, had climbed the heights of science before the Greeks had learned their alphabet; and while the forests of Europe were stocked with a few wild, uncultivated savages, these were collected into populous cities, the seats of arts, of luxury, and of despotism. Asia has given birth to some of the greatest monarchies of the world; to that of the Assyrians, the Medes, and the Persians. The foundations of astronomy are said to have been laid in Babylon; and from the Magi of Persia, Pythagoras is declared to have acquired the principles of that knowledge which procured him the applause and veneration of the Greeks. Hindoostan was infinitely more enlightened than it is at this day, and its inhabitants, a civilized, a commercial, and even a warlike people; and at the time that the Greeks imagined themselves the only great people upon earth, Confutsee had planted morality and good government in China. Thus we see that literature, taste, and science originated in Asia, and by a gradual diffusion, in the course of time, spread themselves over Greece and Italy. Such then having been once the state of the sciences and arts among the Asiaticks, it cannot be unreasonable to suppose, that their ability still remains unhurt and vigorous; and that those sparks of genius, hitherto smothered or enfeebled by the noxious climate of oppression, might, under the congenial influence of a milder government and more favourable laws, again be fanned into a flame.

"If," says Sir William Jones, "the numerous writings of the Hindoos on grammar, logic, rhetoric, and music, all which are ex-

tant and accessible, were explained into some language generally understood, it would be found that they have the highest pretensions to the praise of a fertile and inventive genius. Their lighter poems are lively and elegant; their epic, magnificent and sublime in the highest degree; and we cannot reasonably doubt, how degenerate and abased soever the Hindoos may now appear, that in some early age, they were splendid in arts and arms, happy in government, wise in legislation, and eminent in various knowledge; indeed, in spite of their many revolutions and conquests, their sources of wealth are still abundant, and in many of their manufactures they still surpass all the world."

Such, then, are the people who now acknowledge the comparatively mild effects of British government. How animating the idea, how glorious the opportunity which Providence has placed in our hands, of diffusing over thirty millions of people a more enlightened knowledge, and a purer system of morality; of employing Christianity to knock off the fetters of Brahminical hypocrisy and pride; and of securing to an ignorant and degraded multitude the invaluable blessings of social felicity!

[*We have said nothing upon the peculiar character of the Hindoostan women, but we shall resume the subject in our succeeding Number. In the mean time we are enabled to present our readers with a Portrait of an Hindoostan Lady, in the proper costume of that country, drawn by A. W. Devis, Esq. who resided many years in India, and who has not given this representation from recollection, but from a drawing made upon the spot.*]

TO THE EDITOR OF LE BEAU MONDE.

SIR,

BEING engaged in enquiries relative to the weather, I am naturally very curious in examining the tables given by the Royal Society on this subject, at the end of their publications. At the bottom of the tables is always inserted the following note:

"The quicksilver in the bason of the barometer is 81 feet above the level of low-water Spring tides at Somerset-house."

Now, Sir, to connect my observations with those made at the Royal Society, it is necessary for me to know the relative situations of the mercury in my barometer with that of the mercury at the Royal Society. The height above low-water mark does not assist me, unless I could ascertain the height of lower-water mark with that of some object with which I am acquainted; and when I compare together the observations made at Brest with those at London, the want of certainty upon this point will strike you and your readers. I should be much obliged to you, therefore, if, by means of your very valuable publication, you would communicate to me the height of low-water mark above or below any point in any building of importance in England; or, perhaps, it would be of general importance if the scientific members of the Royal Society would ascertain the height of their barometer with respect to the Grand Junction Canal at the wharfs at Paddington. By means of this ascertained height, we shall be enabled, in all the midland parts of England, to compare the heights of our barometers with that of the Royal Society; and then our observations may be compared with each other with great ease and very great advantage. I need not expatiate upon the benefits of the measure I propose, and hope only, that as your very useful and elegant work will fall into the hands of many members of the Royal Society, some or other of them will have the public spirit to take this matter into consideration. I remain, Sir,

Your constant Reader,

INDAGATOR.

ACADEMICAL CONTRIBUTIONS.

CHAP. IV.

AND whetersoever theyr proclamation was brought, the people made common feastes wyth great joy and gladnes; the old malyce that was heardened in theyr myndes, now when they hadd lycense, shewynge itselfe forth. But the Jewes were in great mournynge, and lamentably complayned, gronynge in theyr hartes, and bewaylinge that sentence of death was thus soddenlye gyven agaynste them. What offyce or cytie, or what place inhabited—what bye waye, was not full of there waylynge and mournynge? for they were sent away by so bitter and cruell a sentence of the cheyfe offycers in the cytie, that for the straunge kynde of punyshmente some of theyre enemies, settynge before theyre eyes the myseries that may happen to all men, and remembrynge in theyre mynde the uncertayne chaunge of thys lyffe, they dyd bewayle theyre pytyful sendynge awaye: for there were led a great sorte of olde men with grey heddes, and theyr legges croked for age, whych were threatened and rebuked, and made go fast, whether they would or no. And the maydens that were lately marryed, insteade of pleasure, hadde mournynge; and theyre heare that was embawmed was now all dostyed; and the same mournynge songes instead of joyfull ballades, and were also vexed wyth straunge women. They were bound and packed together, even till they came to shyppynge. Theyr husbandes also havynge halters about theyre neckes instead of garlantes, being in theyre yong and floryshynge yeares, in the stede of myrthe and quyetnes, passed the reste of theyre dayes in mournynge, and sawe death before theyre feete. And they were carryed awaye lyke wylde beastes, and drawen wythe chaynes; somme were bound to toppes of shyppes, by the necke, and others were fettered so that they coulde not be undone, and tables sett over theyre heddes, bycause they shoulde not see all the whyle they sailed. When they hadde thus ledde them to shyppe, when the jorney was done as the kynge commanded, he had that he shoulde be set in the tentes, in that great roume wher horses that is before the cytie do runne, for an example of punyshemente to all men that came into the cytie, and that go out into the countrye; nether wyllinge them to be amonge the men in hys armye, nor yet within the compass of hys walles. When thys was done, and that he heard saye that certayn of theyre nacyon was gone pryvelye out of she cytie, and dyd often bewayle thys shamfull mysery of theyre brethren, beyinge angrye, he commanded them also to be handled after the manner that the other were, theyr punyshement nothynge to be diminished, and that all theyre kindred by name shoulde be attaynted. For he sayde that he wolde not take eny of them into paynful servyce, but that in one daye he would slaye them al wythe such punyshement as hath not been devysed. So they were proclamed traytours most bitterlye, and the sessyons was kept contynewally from the rysynge of the sonne to the goinge downe, and yet was it not fortye dayes. In the meane tyme the kynge, ful of greate and continewal joy, kept feastes before al the images, hys minde far from the trouthe, and wyth a wycked mouth praysinge them thynges whyche colde nether speke nor helpe, and agaynste al reason blasphemynge the God of Myghte; and after that, when the Scrybes hadde shewed the kynge that they were able to punyshe the Jewes no longer, for the greate multytude of them, for many of them was scattered abrode in the contrey, somme yet at home, and somme in other places, so that it was a thynge impossible to do, for all the offycers in Egypte, the kynge threatened them sore, as tho' they hadde been hyred to helpe them for gyftes. Yet so it fortuned that they persuaded hym, shewynge evydently that they lacked both paper and penties to serve them. And thys was the playne worke of hys Provydence whyche dydde sende helpe to the Jewes from Heaven.

(To be continued.)

L

IMPROVEMENTS IN CONDUCTORS OF ELECTRICITY, AND INSULATING POWER; BY MR. HALLPIKE.

"I have nothing in view but the improvement of knowledge, which is nothing, and perhaps worse than a feather, in the moral system of the world, if it be not sworn and faithful to the honour of truth." *Celtic Researches*, Pref. xxv.

HAVING been for a considerable time past conversant with electrical operations, from a natural fondness for a science which appears to promise much advantage to mankind, and which is, at the same time, enveloped in no little mystery, I was induced to turn my attention to the usual construction of conductors, and the ordinary modes of attaining insulating power to the greatest possible advantage. With this view (though possessed of cylindric conductors coated after the usual manner, with tin-foil, and able to obtain powerful charges) I could not help suspecting that in the same compass much greater advantage would accrue, provided the conductors were differently constructed. ——To this end, I formed a hollow conductor, A, B, C, D, Fig. 1, Plate 2, of perfectly well-seasoned dry mahogany, glued up in thicknesses of three-eights of an inch, until the integral amount was three inches; which done, they were turned with grooves to receive sheets of common tin, (that is, tinned iron, one cross of the manufacturers,) which sheets were carefully hammered to the shape desired, by a tinman. To prevent sharp edges at the respective junctures of the tin, pieces of wood, *a*, *a*, *a*, &c. in Fig. 1 and 2, both externally and internally shaped as the tin, and joined together, during their being turned, and opened to receive the tin were attached. They were also tin-foiled over, after being screwed together, which added to the insulating power of the conductor, both internally and externally. In short, every part of the wood was covered with tin-foil, except such as were already covered with sheet tin, and which of course needed no more than contact of the tin-foil. This conductor (of the concave interior of which, Fig. 2 is a section) may be suspended with advantage by silk strings *c*, *c*, *c*, *c*, Fig. 1, over the apparatus, in any room, and thus occupy but little compass. The conducting rod which passes from the prime conductor of the electric machine, and which is represented here by the letter *b*, is much longer in the apparatus than represented in the plate, in proportion, since it is desirable that the secondary, or insulating conductor, should be suspended over the heads of the operators; by which means the machine and the other apparatus are brought into the compass of a small Pembroke table.—It cannot be of consequence whether the original excitement be furnished by the usual electrical machines, as represented by the cylindric one of the plate D, or whether the plate machinery of Mr. Cuthbertson, which have doubtless advantages, be employed.—A portable chair, E, to be insulated by glass pedals, *e*, *e*, *e*, *e*. The legs may either screw into a simple frame, or, as represented in the figure, into a flat foot-board, the whole of the chair being carefully covered with tin-foil, the glass legs excepted, and armed, when necessary, as by inspection is more obvious, with balls attached, after the accustomed manner of electricians.

If I be correct in such information as medical men have advanced, that more perfect and adequate insulation is desirable, rather than inordinate powers of presenting the shock, it will follow that a conductor, so constructed and so connected as to give the medical artist the higher means of insulation, is a desideratum of no mean import. It will gratify me much (who have, with a view to benefit my fellows, rather than with the expectation of having much added to the science of which I have been so long an ardent amateur) to be considered as having filled up any vacant niche in the desiderata of this equally important and mysterious branch of philosophy.

Wilderness-Row, 19th Sept. 1809.

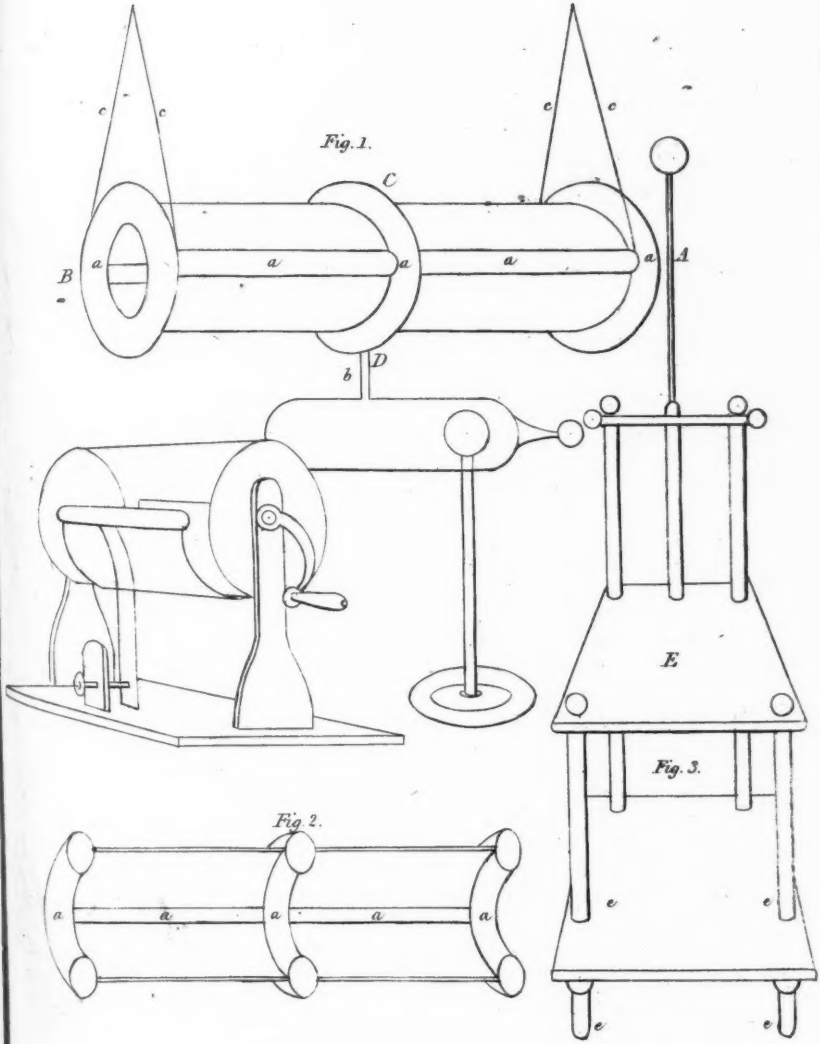

Fig. 2.

ASTRONOMY.

WE feel so lively an interest, and have so much pleasure in promoting every establishment that has for its object the improvement of art or the advancement of science, that we cannot avoid expressing the satisfaction with which we lay before our readers the following *Report of the Nature and Progress of the Glasgow Astronomical Society*, drawn up by order of the Directors of that laudable institution.

"The Committee of the *Astronomical Society of Glasgow* beg leave, in this manner, to solicit the attention of the friends of science to the nature and objects of that institution which has been recently formed in this city, and on whose behalf they are called to act. Having lately received an important communication from Dr. Ure, who is gone to London on the business of the Society, and having made considerable progress (chiefly by his exertions) in maturing the plan of an observatory, they conceive it may be gratifying to the subscribers, and to the public, to have laid before them some account of the origin and plans of the association, together with some extracts from that interesting report.

"Little, it is presumed, need be said to convince any intelligent and reflecting person, of the importance of astronomy, or of the advantages to be derived from an acquaintance with it.

"Unquestionably, it is the first of physical sciences, and the sublimest of all those studies which are conversant with the material universe. Embracing a vast range of the most magnificent objects of sense, it is calculated, in an incomparable degree, to entertain, to expand, to elevate the mind of man. Considered merely in the light of an amusement, it must be regarded as the most elegant and improving of all others. But it may justly lay claim to a distinction far higher. On its lofty speculations are founded the most direct and conclusive evidences of the existence and government of the Great Supreme; upon the admission and demonstration of which, depend the first principles of all religion and of all morality. Nor is the utility of the philosophy of the heavens, in this view, merely theoretic and argumentative. The effects of this study, on every well-disposed mind, will be practical, and, in the highest degree, impressive. Who ever beheld the sun going forth in his daily course, or the moon walking in brightness, or the host of heaven moving majestically through the mighty expanse, without feeling emotions of wonder and of awe—without tasting a pleasure equally sublime and devout? And the farther our researches are carried, the more accurate and extensive our knowledge of the heavenly bodies becomes, the more powerfully will such impressions be felt—the more exquisitely will such delights be enjoyed.

"Eminently conducive to the highest interests and happiness of our nature, astronomy will also be found subservient to many other important objects.

"All accurate notions of the lapse and division, and every precise method of the distribution of time, are derived from the revolutions of the heavenly bodies. Hence agriculture, the most important of arts, and all its kindred branches, as well as every appointment for business, are regulated and directed by the computations of the astronomer. The survey and delineation, whether civil or military, of countries or of smaller districts, and all the principles of geography, are merely the application of a few simple astronomical problems. Chronology also must have recourse to our science, for instruction to determine accurately the dates of the epochs of ancient history. But the most splendid instance of the subserviency of this apparently speculative study, to the uses and convenience of life, is, in its application to the art of navigation, an art on whose perfection commerce, and, of course, the well-being of this community in parti-

cular, and even the existence of the kingdom of Great Britain, manifestly depends. In the earliest times, the mariner, whose adventurous spirit, or necessities, led him to forsake the well-known coast, and launch into the turbulent and viewless ocean, knew well that the motions, relative positions, and configurations of the heavenly bodies, were his only remaining guides; and hence, he cultivated, with no mean zeal and proficiency, practical astronomy. The discovery of the directive power of the magnet, and the consequent introduction of the compass into navigation, promised, for some time, to supersede celestial observation; but experience, so far from realising this sanguine hope, thus naturally inspired, has proved how little dependence can be safely placed, particularly in long voyages, on that instrument; that its indications vary in a succession of years, and even in the same year differ essentially in different regions of the globe; in almost none pointing to the north, as the vulgar believe, but in many, like our own, deviating 23 degrees from that point. The declination of the magnetic needle from London, is from 23 to 24 degrees,—at Glasgow, it is from 27 to 28, west of north; and in others no less than 30, or a third of the whole quarter of the heavens. But even supposing that its indications had been true, it could merely have announced the direction in which the ship was proceeding at the time; it could never pretend to point out its position on the bosom of the deep. This information could be obtained only from a skilful inspection of the heavens. Two problems here presented themselves. The first and simplest, was to discover the place of the vessel relative to the north-pole of the earth, or relative to the equator, which is vulgarly denominated the line. The solution of this problem, which is obtained by observing with proper instruments with divided or graduated arcs, the height of some remarkable star above the horizon, or the altitude of the sun or moon, allowances being made for the season of the year, has been practised for a considerable period; rudely for a long time, but in consequence of the recent perfection which the instruments have attained, it can now be performed with the greatest accuracy; indeed always within a league of the truth. The mariner can thus say how far south or north he has sailed, or can point out with certainty his parallel of latitude. But still he is ignorant of his position relative to the east and west. The solution of this constitutes the second problem. He attempts, indeed, to discover by the log-line, the rate of sailing, or the velocity of the ship; and by computing the time and the rate, he endeavours to guess at the distance and direction of the course. Though the log be a handmaid not to be despised or overlooked, yet those whose education does not enable them to consult surer and more scientific guides, are continually bewildered. Sometimes hurried along by a current, of whose existence the log, being affected by it like the ship, can give no indication, they rush blindly to destruction, which a little knowledge would have taught them easily to avoid; or, they watch day after day in foolish expectation of a view of the land, which before they can reach, they must navigate several hundreds of miles. These are no fictions conjured up by imagination, to inspire regard for a favourite science, but are cases derived from real history and recent events. The former alternative of unskilful navigation, had, to us, a melancholy and impressive illustration, in the shipwreck of that fleet, which, a very few years since, sought destruction, in temperate weather, on the coast of Portugal; and the latter case, though less disastrous, yet exceedingly awkward, is exemplified every season, and has been experienced more than once by a member of your committee.

"The distance east or west from some fixed point on the earth, such as London, is denominated the longitude. The determination of this is, for reasons presently to be assigned, a more difficult problem than the preceding; and, indeed, till within the last thirty years, science presented to the mariner no accurate or ready practical method of solution. All the celestial bodies wheel round the earth, by the effect of the diurnal rotation. Were there among the host of heaven any star which did not obey this

general impulse, the mariner, by observing its height at a certain time, in different regions of the earth, and comparing this with its known height at the same hour, at any standard place on the surface, could easily ascertain his position.

"What nature seems to have rendered nearly impracticable, science and art have, in their modern advancement, entirely accomplished. Two general methods have been had recourse to; the one derived chiefly from the accurate observations and computations of the astronomer, the other resulting principally from the improvement of mechanism. As the sun, popularly speaking, completes a revolution in 24 hours; and as the circle which he describes in the heavens is, by universal usage, divided into 360 parts, called degrees, in the course of an hour he will run over the 24th part of 360, or 15 degrees. Hence, at a place 15 degrees east of Glasgow, or 900 nautical miles, since each degree contains 60, the sun will rise an hour earlier; and at another 15 degrees west, he will rise an hour later than with us, on any given day. There will also be an hour of difference between us and each of these places, in the time of the sun's reaching his meridian height, which constitutes noon. At any place, 1800 miles east or west, there will be two hours of difference, and so on. Now, as on the one hand, by knowing the number of miles we may happen to be from any point, east or west, we can easily determine how much earlier or later, at that point, the sun, or any other heavenly body, will attain its meridian altitude; so on the other, by discovering the difference of time, whether in advance or in arrear, we may ascertain, with equal precision, the difference of longitude, allowing at the above rate of 15 degrees for every hour, or 15 miles for every minute.

"All the rational and effective modes, then, of discovering the longitude, resolve themselves into means of determining the time of day, at any fixed point on the earth agreed on for this purpose, and comparing it with the time of day, at the place of observation; which time is easily known by the altitude of the sun or other celestial bodies. This point, with regard to the British astronomers and navigators, is the observatory of Greenwich.

"Though nature, as we have already said, has exhibited to the vulgar uninstructed view, no fixed object in the heavens, or celestial signal, so to speak, which may announce the hour at any definite distant place, yet the intellectual eye of science can discover in the perpetually varying aspects and configurations of the heavenly orbs the means of discovering this important fact with singular precision. And here it is impossible for the generous heart not to reflect with gratitude and veneration on those illustrious individuals, who, shunning the gaudy honours of ambition, and disdaining the sordid cares of avarice, have devoted, with disinterested aim, all their noblest powers and faculties to the discovery of useful truths, and to the diffusion of those philosophic treasures, which may adorn and enrich, not a sect, a party, or a nation, but which are calculated to ameliorate the condition of the whole human race, in every country, and through each coming age.

"The planet Jupiter, considered by the herd of mankind merely as the largest of those sparkling points that compose the gay spectacle of the sky, is yet an object far greater and more magnificent than the Earth, turning like her, on its axis, with wonderful rapidity, and wheeling, in a stated period, round the sun.

"The four Moons which revolve round Jupiter, and which compensate for the fainter light of a more distant sun, while they afford noble objects of contemplation, furnish, in the eclipses which they undergo in frequent succession, valuable practical information. The path and movements of this glorious body and its attendants are so well ascertained, that the phenomena occasioned by their changes of position can be predicted by the astronomer for any future instant of time. During the last forty years that the appointment of Astronomer Royal has been filled by the Rev. Dr. Maskelyne, with great honour to himself, and eminent usefulness to mankind, the periods of these phenomena have been accurately computed,

and tables of them regularly published, under his superintendance. Hence, any person, wherever situated, by observing the instant at which these appearances occur, and comparing it with the period stated in the Nautical Almanack, or Astronomical Ephemeris, can determine at once, from the difference of time, the difference of longitude, which is east or west according as the time in the tables is earlier or later than that at the place of observation. It is to be regretted, that this, perhaps the most exact method of solving the above great problem of the longitude, should be scarcely practicable at sea, from its requiring the utmost steadiness in the telescope.

"Eclipses of the Sun or Moon, like the eclipses of the Satellites of Jupiter, are, in a similar manner, employed to determine the longitude; but being objects of comparatively rare occurrence, they are not to be relied on for the purposes of the mariner. It is the Moon herself, whose gentle radiance and chearful aspect have long engaged the affections of mankind, and whose devious course, till within these few years, baffled the computations and predictions of the astronomer, who, by her position relative to the Sun or certain conspicuous stars, now offers to the navigator a never-failing and unerring guide, in traversing the ocean. The causes of all her irregular motions being, from the astonishing perfection of physical astronomy, fully developed, her place, for any moment of time, can be determined beforehand. Tables, representing her situation, are accordingly calculated, under the guidance of the Astronomer Royal, and the mariner has now merely to familiarise himself with the greatly simplified modes of observing the apparent, and thence estimating the true distance between the Moon and the Sun, or a certain fixed star, in order that, by comparing the time of day or night at which this distance is observed, with the time stated for it to happen at Greenwich, he may deduce, with exactness, the longitude of his ship, which, as in all the former cases, is west or east, according as the time of observation is earlier or later than that in the Ephemeris. This mode of determining the longitude is said to be by lunar observations, and it owes its present state of practicability chiefly to Dr. Maskelyne.

"The other general method of finding the longitude is by chronometers, or accurate watches, regulated to mean time, and set to the clock at the standard meridian, Greenwich; whose indications being compared with the time in the place of the ship, deduced from the simple observations of the altitude of some well-known celestial body, give the longitude. Though the genius of the mechanist, availing himself of all the resources of his art, and of certain chemical facts, has been able to bring the art of horometry to remarkable perfection, yet, from the accidents to which these machines are liable, particularly at sea, this mode should, for complete security, be combined with that by lunar observation. This union of science and art has co-operated nobly to the improvement of the navigation of the India Company's ships, which now proceed to their destined port with an undeviating promptitude, most propitious to the safety of the passengers, and favourable to the interests of that commercial establishment.

"From the result of Dr. Ure's investigations, we are warranted in the assertion, that these scientific resources are less justly appreciated and improved in the other marine departments of this nation, and that in several, they are scarcely known or practised; whence the greatest inconveniencies and calamities are frequently sustained.

"Considering the sums that are annually lavished on public amusements, it is truly astonishing that no associations have been formed to establish practical observatories. These might be erected at an expence comparatively trifling; and besides serving to adjust the clocks of a city, whose gross irregularities often produce serious obstructions to the punctual transaction of business, would enable the mariner to become familiarly acquainted with all the requisite manipulations and details of nautical astronomy. They would also enable gentlemen to enjoy, in the greatest perfection, the use of the finest telescopes which art could fabricate. This must be deemed a luxury of the most re-

fined and elegant description; and, accordingly, few gentlemen of education, in and near the metropolis, fail to provide themselves with a respectable telescope; but these falling far short of the powers and excellence of the instruments which a Society can procure, and being, moreover, seldom advantageously placed for viewing either the heavens or the surrounding country, cannot yield that gratification, even for a large sum, which the present scheme promises to yield, for an inconsiderable contribution.

"La Lande, the distinguished French astronomer, reproaches this maritime nation, that nothing is done for practical astronomy except at Greenwich: that no counter-observations are made on any other part of the island, whereby those of this celebrated establishment might be compared and corrected. Oxford, indeed, possesses an observatory of modern date, and of an architecture profusely magnificent, for the building alone cost 25,000l; but no observation ever issued from its walls, though it be furnished with most respectable instruments. The same may be said of others, which were endowed in no contemptible manner. They have never acquired the true character of an observatory; no regular series of observations having been made and recorded in them. Rational hopes, indeed, may be entertained, that the scientific zeal and liberal spirit of some individuals may supply what public establishments have failed to execute, and thus remove a national reproach.

"The Hon. Mr. Greville, a munificent encourager of science, and possessor of the finest mineral cabinet in the kingdom, was busy, previous to his death, which happened a few months ago, in erecting, under the direction of Mr. Firminger, long time assistant at Greenwich, a complete observatory at Milford Haven.

"The observatory of Colonel Aubert, at Islington, is favourably spoken of by foreign astronomers.

"Captain Huddard, after a career of remarkable success, as a mariner, derived entirely from his superior skill in nautical astronomy, now solaces his declining years with the cultivation of this science, at Highbury Terrace.

"Mr. Groombridge, of Blackheath, we shall have occasion afterwards to advert to, as one of the most indefatigable practical astronomers of the age.

"And our neighbour Colonel Brisbane, of Brisbane, has recently constructed at his country-seat, an observatory, equally distinguished for its utility and elegance. This gentleman, from his earliest years, has found in scientific pursuits, not only a noble resource against that *ennui* which is so apt to make men of fortune its prey, but has frequently been enabled to apply the speculations of his leisure hours to purposes of important public advantage. During the repeated voyages across the Atlantic which the honourable and zealous discharge of his military duty required him to perform, his astronomical acquirements were of essential service to the fleets with which he sailed. Though the application of this sublime science to navigation had never been with him a regular study, yet his character for superior skill and accuracy of observation was such, that, at the request of the Commodore, he had, on one occasion, the honour of daily announcing, by telegraphic signal, the situation and progress of the fleet; and, on other occasions, he has corrected, within a league of the truth, an error in the reckoning amounting to several hundred miles. His calculations have enabled him to predict, after a voyage of many weeks, the precise hour at which land would be seen, and to pourtray beforehand the form in which the nearest shore would present itself to their eyes. Thus amply qualified to appreciate the benefits which science would confer, as he had been taught to recognise the dangers flowing from the want of her instructions, this enlightened and active gentleman represented, some time ago, to the magistrates of Greenock, the advantages to be derived to the commerce of that extensive sea-port, from an institution similar to that now established here. His suggestion was received with a respect due to the object, as well as proposer; deliberations were held on its execution, and a correspondence took

place with an eminent London artist about apparatus; but the great expences incident to the improvement of their harbour made them abandon their design for the present. In Edinburgh too, the want of such an establishment has been long felt and lamented by the scientific men who adorn that abode of learning. Indeed, common report taught people to believe, that on the Calton Hill an observatory stood. This house, however, could never lay claim to any such title. It was furnished with no accurately-divided fixed astronomical instrument, but contained merely a reflecting telescope, for the purpose of star-gazing. The situation, indeed, shelterless and exposed to furious gusts of wind, was perhaps, not the most eligible for delicate observation; but as it was unconnected with any scientific seminary, and subservient merely to popular amusement, it has fallen to complete decay, and the principal instrument is now taken asunder.

"The necessity of having, in the capital of Scotland, a practical observatory, obvious enough, for many reasons, is strongly elucidated by the following anecdote: A few years ago, a captain of a Russian ship of war, distrusting his chronometer, on whose movements he had been accustomed to place his chief or sole reliance for ascertaining the longitude, ran his vessel up to Leith, in order that there, or, at least, at Edinburgh, he might get his watch set to the standard time at Greenwich, and have its rate of going and error determined. After many fruitless inquiries, he was at length directed to the professor of natural philosophy, a gentleman profoundly versant in the science of the heavens. Here he was assured his desires would be gratified in the most satisfactory manner. What was his astonishment, on being told by this eminent philosopher, that neither he, nor any other person in the capital of Scotland, knew, with precision, the time of day, far less could they pretend to adjust or to regulate the chronometer of the mariner!

"Barbarous as we have been taught to believe the Russians to be, yet their government, aware of the vast importance of that science which directs the mariner and surveyor in their operations, has founded, throughout their mighty empire, numerous institutions similar to our own, and furnished with apparatus of the most splendid kind, from the most celebrated London artists. Indeed, at this very moment, when every friendly relation with that nation is interrupted, the intercourse of science is continued, and numerous commissions for astronomical instruments are still received and executed; in the same way that the emperor of the French pays homage to intrinsic greatness, by laying open to Herschel those channels of communication which are shut to all the world beside.

"Adverting to the sublime character of the science of astronomy, and to the benefits which it is calculated to confer, it has often appeared surprising to many gentlemen, that less attention has been paid to this study, than to almost any other; that it has seldom entered into the scheme of a classical education, and that the means of prosecuting it have rarely been made accessible to the public, at least in a popular form.

"The wheel-work mechanisms, under the names of orreries, planetariums, &c. which have been contrived for the purpose of illustrating or explaining the heavenly movements, give such mean and erroneous conceptions of the celestial phenomena, as to deserve little notice; and they are, accordingly, now rejected as frivolous and misleading toys, by the philosopher, who considers the actual observation of the heavens as the easiest, the noblest, and most improving method of acquiring a knowledge of their structure and revolutions.

"It will unquestionably, therefore, contribute to the the respectability of this great and opulent city, to have an observatory erected under its own auspices, a set of the best instruments procured, and regular observations made, and committed to writing. Such an establishment would supply a noble recreation to our active citizens, during the intervals of business, and concur with other institutions of the same, or a similar kind, to throw an additional light upon the public mind, and to give, occasionally, a pleasing

and elevated turn to the conversation of the social circle.

"With the view of contributing to these excellent purposes, and of multiplying the means of public improvement, towards the end of March last a number of gentlemen met, to deliberate upon the project of an *Astronomical Observatory*, which had been suggested by one of them; and after conversations held at different times on the subject, they agreed to receive subscriptions, with the view of erecting such a building, and procuring the necessary instruments, as a great public seminary, and ornament to the city of Glasgow. From the beginning, they had been willing to persuade themselves that an enlightened community would zealously concur in a scheme, which promised to combine the most important commercial advantages with the highest scientific gratifications; but their success far exceeded their most sanguine expectations, and soon convinced them that every thing was to be expected from a generous public; and that nothing, which deserved encouragement, would want support from our liberal fellow-citizens.

"In consequence of the readiness with which many came forward to patronize the undertaking, and having now the prospect of realizing their wishes, the friends of the Institution held their first meeting in the close of March, a short time after the subscriptions were opened, when they agreed to form themselves into an association, under the title of *The Astronomical Society of Glasgow*; and adopted those rules which are annexed to this address. They nominated Dr. Ure, by whose exertions a considerable part of the subscriptions was obtained, observer and superintendent. They also chose, in terms of the 4th regulation, a committee of nine Directors, to manage the ordinary business of the Society, and carry their plans into execution.

"The persons honoured with this appointment soon met, and after choosing their own office-bearers, proceeded to deliberate upon the best methods of fulfilling the wishes of their constituents. To procure a proper site for the observatory was the first thing that naturally engaged their attention; and this they were so fortunate as to obtain, upon reasonable terms, from Mr. Harley. The situation chosen, is the highest part of the ridge of Garnett Hill, and is, perhaps, preferable to that of any observatory in the island *. It commands a delightful prospect, is entirely free from smoke, is easily accessible, and not more than a few minutes walk from the very centre of the city.

"In the course of their deliberations and arrangements, the committee learned the Colonel Brisbane, a most assiduous and successful cultivator, as we have already seen, of practical astronomy, was in the act of erecting an observatory, at his neighbouring seat of Brisbane. From this gentleman's ingenuity and experience, they conceived his building would probably furnish some excellent hints for their own, and they accordingly requested Dr. Ure to visit the Colonel, and to solicit his co-operation. On his return, Dr. Ure stated to the committee, that he had been received with the most polite hospitality by the Colonel, who had shown him the whole detail of his plans, which seemed to be truly excellent, and worthy of imitation; and that, moreover, this gentleman had promised his most cordial assistance; in proof of which he had written a letter to the committee, expressive of his readiness at all times, and in every possible manner, to promote their enlightened and laudable designs.

"That the committee, however, might fully acquit themselves of the honourable responsibility which they had incurred to the Society and the public, it was determined to send Dr. Ure on a scientific mission to London. Accordingly, the measure was proposed to him, and, with a promptitude which his ardent interest in the objects of the In-

* It might be imagined, that we would except the noble site of the Greenwich observatory, which commands certainly the most magnificent view in the kingdom; but the great forest which embosoms this venerable fabric, often emits such copious vapours, as to render observation near the horizon more than usually precarious.

stitution had prepared them to expect, he complied with their wishes, which, indeed, coincided with his own judgment. He was instructed to submit the plans of the Society to the distinguished English astronomers, who, to their own honour, and that of their country, must be allowed to be the worthy successors of Newton, and not inferior in celebrity to any of the present age; to solicit their advice and instructions in the design and arrangement of the building, and in the choice of instruments; and also to secure a permanent interchange of kind offices. Thus engrafted as a branch on the mighty tree of Science, the Glasgow Observatory might hope to flourish in perennial vigour and fertility.

"Though convinced that the nature and end of his journey would be sufficient passports to the learned, yet anxious to obtain, not the common forms of politeness, but effective assistance, Dr. Ure, previous to his departure, provided himself with proper letters of introduction. From John Leslie, Esq. Professor of Mathematics in the University of Edinburgh, and the able author of the celebrated Essay on Heat, he obtained a very valuable introduction to the Astronomer Royal, which, at the same time that it laid open to the Doctor the fountain-head of the science of the heavens, marks also the Professor's opinion of the plans of the Society.

"The committee, conceiving that it will be satisfactory to the subscribers to observe the respectable manner in which their envoy was enabled to approach those dignified by their genius, and venerable for their services in philosophy, have inserted this letter in a note *.

"Professor Muirhead, of Glasgow, Dr. Brewster, the ingenious and learned editor of the Edinburgh Encyclopedia, the celebrated Dr. Henry of Manchester, Colonel Brisbane, of Brisbane, and several other gentlemen, zealously concurred, on the present occasion, to manifest their good wishes to the objects of the Society, by furnishing Dr. Ure with valuable letters, as will be more particularly stated in the sequel.—After his arrival in the capital, and in the course of inquiries, conducted with equal ability and exertion, he obtained the advice and the aid of the most celebrated philosophers and artists, in a manner which, while it did honour to their politeness and love of science, was equally flattering to him as an individual, to those gentlemen by whom he was favoured with the means of introduction to some of them, and to that institution on which they were pleased to bestow so early a patronage. Of the services of all of them, the committee have a most grateful sense. Suffice it to say here, that the Society's representative has been honoured with the counsel and countenance of the first professors and friends of science, resident in the capital of Scotland, or in the metropolis of

* "Dear Sir, *Edinburgh, 8th May* 1809.

"This note will be delivered to you by my ingenious friend **Dr. Ure**, who has for several years filled the situation of public lecturer in the Andersonian Institution at Glasgow, with distinguished reputation. A number of spirited individuals in that commercial city have now raised, by subscription, a considerable sum, for erecting an Observatory on the most liberal plan, and have appointed Dr. Ure to superintend the establishment. He therefore proceeds to the capital, to gain what information, and procure such instruments, as may be conducive to the plan. With this view, Dr. Ure is anxious to have an opportunity of visiting the Royal Observatory, and of remarking the skill and accuracy which, under your direction, have been introduced into that national establishment. I hope, from your liberality and zeal to encourage the promotion of science, you will give him every facility in improving his acquaintance with the nice and difficult art of observation. I am, dear Sir, with due respect, very sincerely yours,

"*The Rev. Dr. Maskelyne,* JOHN LESLIE."
Astronomer Royal, &c. Greenwich.

the kingdom, among whom are persons of high rank, whose station does not indispose them from prosecuting and promoting philosophical investigation and discovery with an industrious zeal which would do honour to any condition of life. These truly great men uniformly expressed themselves delighted with the project of our institution, and said it did great honour to the spirit and judgment of the citizens of Glasgow.

"The committee now beg leave to submit to the public the following extracts from Dr. Ure's official letter, which, they presume, will justify the expectation of the committee, that the plans about to be executed, from the pains which have been taken in maturing and perfecting them, and from the great improvements lately made in the art of constructing astronomical and meteorological instruments, will give birth to an establishment, equal, at least, if not superior, in elegance, utility, and extent, to any thing which this or any other country, at present, can boast of. The design of the building, which accompanied that letter, the committee conceives a specimen of elegantly simple architecture. The explanation of the structure, and uses of its various parts, as well as the great attention which has been bestowed upon the subject, and the success with which Dr. Ure's exertions have been rewarded, cannot be better stated than in his own words.

(To be concluded in our next.)

ALPHONSO: OR, THE NATURAL SON.

Continued from page 27.

"ALPHONSO, do not become a misanthrope: do not complain of the world before you know it; be persuaded that it will treat you with kindness."—"I want none of it's favours—I ask of it nothing more than justice."—"The world refuses even justice to those who will not condescend to please it."—"I then shall have reason to despise it, and of that I shall be glad, for I am already disposed to detest it."—"Now, you are unjust."—"Yes—through the errors of the law: a man unjustly degraded can feel very little benevolence towards other men."—"Alphonso, I am persuaded, that when you permit yourself to reflect, you will never be unjust."—"I will not, indeed, because I will do nothing without consulting you." At these words Melvil pressed the hand of Alphonso, and exclaimed, "I foresee, my dear boy, that this disposition of yours will occasion you many sorrows, but I am confident that it will preserve you from many faults. You are of a character replete with determination, haughtiness, and irritability; all of which would be truly alarming at your time of life, if your soul did not display such amiable traits of sensibility and generosity. Those only suffer themselves to be carried away by their impulses, who possess not a good heart: your heart, my young friend, will always correct your defects.

CHAP. XI.

The departure of Melvil with Alphonso created a real uproar of tittle-tattle among among all the visiting parties of Besançon. It contradicted downright all the stories in circulation concerning the pretended quarrel of Melvil with Melania and Dormeuil. But nothing embarrasses the invention of a thorough-bred gossip: a new tale is instantly composed, uttered with the same bare-faced assurance, and believed with the same voracious credulity. The president's lady was in the full glow of joy and of malice, for it was known that Melvil was about to renew his establishment at Paris; and therefore it must be impossible for the Marchioness to

preserve the least expectation of his union with her daughter. At the same time this Lady President of Besançon resumed her own hopes of the success of her son: these revived hopes rather moderated her epigrammatic inuendos, and induced her to conciliate the mind of the Marchioness: but the points of her malevolence pierced through her complaisance; interest itself was not sufficiently powerful to restrain it. The Marchioness, enraged against Melvil, detested him with all the fury of wounded and disappointed vanity. She consoled herself by using all her efforts to turn him into ridicule. On the day after the departure of Melvil, she supped with the president's lady: the news of the day furnished the topics of conversation: the Marchioness affected that sort of satyric and contemptuous sprightliness which, while it endeavours to conceal vexation, serves only to render it more manifest. "Upon my word," she exclaimed, "I never heard of a more laughable incident than this!—to be sure a man may be in love, and a man may be jilted—all that is common enough: but, for a man, after having quarrelled with his mistress on account of his discovering her intrigues with another, to conclude the business by getting possession of his rival, and under the title of a new Mentor to carry off the poor lad the lord knows where, is one of the best jokes that ever was related."—"But, my dear Madam," replied the president's lady, "what are you talking about? you are spoiling the prettiest romance that ever was written."—"A romance indeed! comical enough! yes, a truly comical romance!"—"Not so, I assure you: you are perfectly misinformed: there has been no intrigue: Melvil adores Melania; Melania rejects every offer of marriage, and at the very moment of his first declaration, she decidedly refused his hand."—"O my conscience, is that at all probable?"—"Probable or not, Madam, it is true: however incomprehensible it should appear to your Ladyship that one should refuse to marry a young, amiable, and wealthy man of quality, it is nevertheless a fact."—"I am certain of the contrary."——"The *contrary*, Madam? What, my Lady, do you mean to say that Melania made the declaration of love, and that Melvil absolutely rejected her advances?" "I do not," replied the Marchioness, coldly, "I do not, Madam, accustom myself to say any thing so ridiculous."—"But, my dear lady, you are in such spirits this evening, that a little nonsense may very easily escape you unawares."—"I mean to say no more than that Melvil could never have had a serious intention of marrying this '*nobody knows who.*' For my own part I am no friend to Melvil, I assure you: I can join in any ridicule his extravagancies may occasion; but since he has been admitted to my table, I think myself obliged to defend him when he is accused of any thing so degrading, so—". "Your principles are indeed great, and it is pity, with such pure and such generous intentions, you should all this time be uttering against Melvil the most cruel and ironical satire; for all the world is convinced that he desired, and still desires, to espouse Melania: only ask these gentlemen." At these words three or four voices immediately cried out that nothing was more true; and a person of great consideration in Besançon assured the company that Melvil told him so himself. "Why then," exclaimed the Marchioness, "the man is certainly become an ideot."—"Pray, why, my Lady?" said the same gentleman, "the young woman is as lovely as an angel; she has led a solitary life, and consequently her deportment is a miracle of modesty and reserve; nor is her condition so despicable: besides, Melvil asserts that she has received an excellent education."——"What, at St. Domingo," said the Marchioness, with a contemptuous and malignant smile. This epigrammatic question threw Miss Aurora into an hysteric of risibility, for what could be more absurd than the idea of a perfect education any where else but in the *Royal Convent of Panthemont.* Notwithstanding the apathy natural to her, Aurora secretly participated in the vexation of her mother, for she was not ignorant of the views which the Marchioness had indulged with respect to her marriage. She regretted the loss of Melvil, and she detested the beautiful Melania, who prevented her be-

coming mistress of the best half of the province. Her laughter made all the company start: it was the first time that she had given any symptom of any emotion, or taken part in any conversation. This violent species of raillery irritated the gentleman to whom the Marchioness addressed herself. In the country, people are not more suddenly angry than at Paris, but they express their anger with less delicacy, that is to say, with more freedom. The affronted gentleman, after being for a moment disconcerted, resumed the discourse, and turning to Aurora, "Yes, my good young lady," he exclaimed, "*a perfect education* may be obtained in any country: for in every country an obliging and mild disposition may be acquired, manners simple and modest, benevolence without coquetry, dignity without haughtiness and ill-temper, and that solidity of instruction so superior to those frivolous acquirements, the professors of which exist indeed no where but at Paris. For instance, this charming Creole is perfect mistress of Greek and Latin!"—"O my God! Greek and Latin!" cried the Marchioness, bursting into a fit of forced laughter, the more noisy because dissembled: "well that is excellent! Greek and Latin, to be sure! no wonder that Melvil is in love. How could he have resisted such an attraction? Greek and Latin! O my stars!"——"Now listen to me, my Lady Marchioness," said the president's lady, "listen in your turn to my pretty romance; I am certain you will be delighted with it. Melvil, as I told you, though rejected, preserved all his affection, all his admiration: he went to Paris with the hope of curing his wounded heart: it was absolutely incurable: he returns more inflamed than ever, and discovers a rival in the young Alphonso." "Ah, did not I tell you so?" "O, you were quite out, my Lady: Melania, far from having any intrigue with the youth, charges Melvil to bring him to reason, and to make him understand that she is not quite fool enough to marry a child."—"What, she entrust Melvil with such a message? A very pretty game! and cunningly played!" "Well, Madam, Melvil speaks to the lad: the lad is seized with the frenzy of jealousy, and the violence of his rage——"O, I see that he was taught to play this part, to revive the extinguished affection of Melvil."—"Be that as it may, he played the jealous lover so to the life, that he insulted Melvil, and compelled him to fight."—"And no blood spilled, I suppose?"—"I beg your Ladyship's pardon: the youthful Alphonso precipitated himself with so much fury upon Melvil, that he fixed his body upon Melvil's sword: he fell, dangerously wounded and bathed in blood."—"How horrid! a duel caused by a woman!" "Give me leave, Madam," said the old Countess of ***** addressing herself to the president's lady, "give me leave: it is perfectly true: I know the whole story: but I understand that they fought with pistols."—"O, no Madam; Melvil would never have fired upon a boy of seventeen." "But, Madam," replied the Countess, "the thing was wonderful; Melvil threw his pistol into a ditch."—"Madam, I tell you that Alphonso was grievously wounded."—"Give me leave: the pistol that was thrown away went off; the ball, in rebounding, struck the young man."—"The ball rebounding from the bottom of a ditch!" "Give me leave, Madam," replied the Countess, with uneasiness, "that is very possible."——This discussion on the possibility or probability of pistol bullets rebounding from the bottom of a ditch, which interrupted so interesting an history, vexed the whole company, with the exception indeed of the Marchioness and her daughter, who found a great many witty things to say upon the subject. The old Countess was at length prevailed upon (but not without considerable difficulty) to give up the point; still she could not retire silently within herself; nothing could repress the reluctant growl with which she yielded; and to all those who sat near her, she continued in whispers to assert that Alphonso and Melvil had fought with pistols. The president's Lady, in the meantime, resumed her recital: "Melvil," said she, "behaved with all the spirit of a true French Chevalier: he took the almost lifeless Alphonso in his arms, carried him into his carriage, and brought him to his château: there he lavished upon

him the most affectionate cares: the two rivals, who loved with a passion equally unfortunate, are become the most inseparable of friends: they have both resolved upon a long absence from the object of such hopeless desires. Melvil has become the patron of the fortunes of Alphonso, and now conducts him to Paris."—"Truly sublime!" said the Marchioness, "'tis pity that the story wants probability: for my own part," continued she, "I have heard this story related in a very different manner. I am assured that Dormeuil, having discovered the intrigue between his niece and his son, requested Melvil to take the youth to Paris, and from thence, I understand, he is soon to be sent to the West-Indies."—Though this story was neither very credible, nor yet very romantic, it found for its supporters two or three young ladies, whom the reputation of Melania's beauty perpetually tormented. Some gentlemen took the part of the charming Creole: the tale, begun in the inventions of malicious slander, terminated in the turbulence of angry dispute:—and thus passes many and many a day in town as well as in the country.

CHAP. XII.

Melvil and his young friend arrived at Paris on a Sunday, about three o'clock in the afternoon, towards the end of the month of July. They passed through the city without a single emotion of admiration or of surprize from Alphonso; so firmly had vexation and wounded pride rendered him misanthropic and disdainful. The mansion of Melvil was situated in the *Champs-Elysées*; and Melvil pointing to the Thuilleries, "Observe" said he to Alphonso, "the palace of our Kings, it is the most beautiful in Europe." "Of *our* Kings, did you say?" replied Alphonso, with an angry smile, "I have no King—those whom the laws proscribe, have neither sovereign nor country."——"We must, however, let our situation be what it may, devote our services to both."—"Am I not interdicted by law? Are not my services rejected?"—"There is more than one way in which a man may be serviceable to his country: except one way only, all others are open to you." "But *one* exclusion you must grant—yes, one exclusion only, of this nature, is hateful,—is insupportable."—"I grant even more, I think it impolitic. As I shall in all things speak the truth openly to you, and as you know that I wish I were able to adopt you publicly as my son, I shall not dissemble my sentiments on this subject. I am of opinion that morality requires a legal severity with respect to natural children: I mean that the law ought to deprive them of all the rights and all the relations of parentage and family. It appears to me just that they should in no manner whatsoever participate in the privileges of the children of marriage; and that with respect to the families of their fathers and mothers, they bring with them into the world an original excommunication. This blemish, so indelibly impressed, will necessarily cause the world in general to regard these unhappy children with an unfavourable eye. In other cases, if the crimes of a father have no influence on the rights of his children, it must consequently be admitted that the infamy of parents cannot descend upon their posterity. A high political privilege is hereby accorded to the sons of sharpers, and to those whose fathers exercised the most infamous and the most odious professions. But, by the same means, an illustrious inheritance, the inheritance of honourable reputation, is taken from the children of heroes, and from those whose fathers have been the benefactors of the human race: for he who remains unsoiled by the guilt of his father, ought certainly in no respect to share the glory which his father may have acquired. But with that parental blemish to which they owe their existence, the political disgrace of illegitimate children ought to terminate. Contaminating to the families from which they sprung, they cannot be so to the government under which they exist. The sovereign, who is the political father of all orphans, ought to be the same towards all those whom their natural parents cannot acknowledge: they are his subjects, and have the same claims as others upon his protection: both justice and policy prescribe his acceptance of all the services which they may be able to render their country." Al-

phonso made no reply: at that moment they entered the residence of Melvil.

The most painful moment, after a sorrowful separation, is the arrival of our journey's end. On the road, a thousand new occurrences serve to direct the attention; but no sooner have we reached our place of destination, than the imagination measures with horror the whole extent of the intervening distance: all appears melancholy and forbidding in the strange habitation in which we are to pass the period of exile: every thing within it congeals the sensations; for nothing resembles the objects of that endeared spot from which we have departed. Alphonso walked mournfully up and down his apartment, with the intention of withdrawing himself from the sight of the unpacking of his boxes: for that equipment of necessaries which indicated the long duration of his absence, pierced him to the soul. The faithful Narcissus, who, by the desire of Melania, had been appointed his attendant, had taken upon himself to set in order all the drawers and presses of the wardrobe. He enjoyed alone and within himself the pleasure of running over this elegant suite of apartments, and of admiring every part of it. His air, replete with satisfaction, and the bustle of grateful employment, increased the vexation of Alphonso. "Enough,—begone,"—said Alphonso to him; "you will fill every room: I know not where to sit down: you are every-where in my way." "O but, Sir," replied Narcissus, "if you would but go into your little closet, which is put into such nice order, and is so very pretty!—you have not seen it yet?—pray do go into it."—"One of the closets of Paris!—how disgusted must I be with it, whenever I recollect that closet which I once possessed!"—"Ah, Sir, this is a hundred times handsomer: the prospect from it is so beautiful, so chearful! In our little forest you could see nobody, but in these *Champs Elysées* there are crowds passing all day long!—O! how delightful it is!"—At these words Alphonso shrugged his shoulders, sighed, and turned his back to Narcissus. At the same time, to restrain the vehemence of his recollections, he went into this closet, so much extolled. On entering, the first object which caught his eye was a small writing-table, new and very plain, but which, in every respect, was similar to the one he had left in his closet in *Franche Comte*, the precious gift of Melania.—The same form, the same colour, the same mechanism, invented by Melania herself; a desk, and an escrutoire appertaining to the table. Alphonso, with astonishment, approaches it: he perceives an inscription in letters of gold upon the escrutoire, and he reads these words, "Sacred to friendship and to study."—He perceives Melania in this; but he cannot conceive how she could have sent this table so speedily to Paris. While he was reflecting upon this, and contemplating the table with all the emotions of reviving tenderness, he is startled by a violent burst of laughter behind him. It proceeds from Narcissus, who, coming forward, exclaims, "Ah! ah! Sir,—what, are you puzzled?"—"How could this table come here?"—"Come here, Sir? in your trunk, to be sure."—"In a trunk?"—"Nothing so easy, Sir. 'Twas made on purpose for that.—See, the legs can be taken off: they are only screwed there; and the top is parted in two:—Look—just so—you shall see." At these words, Narcissus laid hold of the table, and nothing could prevent him from unfixing every part of it. This was a business of some duration; for at every separation of one piece from another, he stopped, with a sort of risible stare, to enjoy the astonishment of his master. He then put it together again. Alphonso now dismissed him, and seating himself at the writing-desk, less irritated, less discontented, and more softened, he began an epistle to Melanja.

CHAP. XIII.

Early the next morning Melvil entered the chamber of Alphonso. "My dear friend," said he to him, "I come to propose a thing to you, which will appear very frivolous, but which, notwithstanding, is very necessary: it is, that you should employ a dancing-master." "You know," replied Alphonso, "that I have no desire to please." "True, but at the same time you must not

displease."—"What! displease, because I may not know how to dance! What an idea you give me of the world!"—"Attend, my dear Alphonso; if you would be always just, do not be so eager to form your judgment on first appearances. Of one thing be convinced, it is, that in general satyric dispositions are erroneous, because they desire to observe the ridiculous only, on every occasion; and when the ridiculous fails, they create it, which is always easy and without danger; for the injustice which excites laughter, finds many to applaud it, and disgusts nobody. The proposition which I have just now mentioned, gives you a very bad opinion of society: but tell me, if, contrary to the present custom, you should appear in company in a gothic habit, such as was worn in the days of Louis XIV, should you think any person to blame, who might laugh at you?"—"No, certainly not."—"It may nevertheless be said, that to ridicule a man's dress is very silly. It may be so; yet a good disposition will still be conscious that it is necessary to conform to usages universally received; and that it is puerile and ridiculous to render oneself remarkable by whimsical and disagreeable little singularities. Let us return to the subject of the dancing-master. By general agreement it is admitted that a certain mode of walking, of salutation, of entering a room,—in a word, that a certain demeanour denotes self-command, mildness, politeness, modesty, and all the qualities of a good education: it is therefore desirable to possess that mein and that external deportment which may possess the world in our favour; and this is exactly what the skill of a good dancing-master is calculated to bestow. If you were forty years of age, you might appear in the world without being noticed; it would be sufficient for you to stand aside: but you are in the flower of your youth; your form and figure are handsome—you will be gazed at—will be closely examined. Your person must therefore display no feature of singularity. Although we may not desire to please, we ought at least to desire not to excite a disadvantageous opinion of ourselves."—"I understand your meaning: these externals of general compliance, these externals of conformity, serve to conceal our faults and our vices, and to deceive those who observe us."—"But is not society in the right, to require the appearance of social qualities? and does it not manifest a species of benevolence truly amiable, since it is willing to form its judgment by these exterior testimonies, until they are belied by the conduct of the individual?"—"You are fond of the world."—"I had quitted it before I became acquainted with you, and re-enter it now with no other intention than that of being useful to you. Besides, I have remarked that almost all the moralists, as well as those who pride themselves on their knowledge of the world, view it too frequently on its darkest side, and for the most part calumniate it."—"Are you not persuaded that in every thing I shall follow your counsels?——I will take lessons in dancing immediately."

In the evening Melvil took Alphonso to the Opera: that magical spectacle made a lively impression on Alphonso; but music always saddens the hearts of the afflicted: it augmented the melancholy of Alphonso, and all the brilliancy of the scene served only to make him regret the more the innocence and the charms of those pleasures which he had experienced in that solitude from which he had been so lately torn. On the next day he went to the *Comedie Française*: Cinna was the play. It was then that Alphonso felt the first emotions of real surprise. Transported beyond himself, he enjoyed the inexpressible pleasure of hearing for the first time, and with the full approbation of his reason, this dramatic master-piece: it was to him a first representation of it, and the elevation of his soul rendered him sensible of all its sublimity. How frequently did the impressions which he received recall the recollection of Melania! Is it possible for the heart to be moved and elated, without bounding by the emotions of nature towards the object that it loves? To feel strongly, however it is excited, renews our fondest affections. Pleasures absorb vulgar minds, and produce oblivion: but in souls capable of ardent attachment, every violent emotion is instantly replete with recollection.

EXHIBITION OF THE WATER COLOUR SOCIETY IN NEW BOND-STREET.

(Continued from Page 501 of Vol. I.)

MR. GREEN may be congratulated on his professional progress. In composition and colouring he is evidently superior to his former self. Yet we are sorry to observe, that the public encouragement has not been in proportion to his improvements; and that, however the Bank of his Treasury * may be filled, it will not be with rewards for himself. Even on his principal performance, we do not see the label with the desirable four letters, though the Exhibition (June 28th,) be on the eve of closing.

That principal performance is numbered 183, and is entitled "*Quoit-Players.*"

In composing it, Mr. Green has brought together a number of diverting incidents, with dramatic effect: and so popular is the scene, and, as we had imagined, the subject, that when we first saw the picture on the opening of the Exhibition, we could not but think that it would have been coveted by many.

All those who take their summer evening walk by the Queen's-head and Artichoke alehouse, will know the scene well—It is the field opposite—and probably some of the characters which are introduced. A group of mechanics are here *relaxing* themselves, after the labours of the day, with the game of quoits; while an amorous negro would ravish a kiss from a reluctant alehouse girl, who, in her resistance, seems to say, she had as lief be kissed by the devil.

The attitude of the sturdy Discobulus, who is about to hurl his quoit, is well conceived, and his attention is very naturally arrested, and the launch of the quoit retarded by the jocular incident of the negro and buxom lass, the comic effect of which is heightened, by its being obvious to all but himself, that a tumbler of ale will fall souse on his woolly pate, and interrupt his bliss, if it quench not his flame.

Of the two jocose-looking fellows who are also engaged in the game, but (for the moment) still more engaged in the laugh against Mungo, he who, in his shirt and paper cap, is waiting for his turn to throw, is also in a good attitude, and seems to enjoy the joke. The fat butcher, who stands beyond, would seem to enjoy it over-much, and his laugh to be a little too broad for his age and the occasion, if we did not recollect that where the real sympathy of youth will only smile, those further advanced in life will sometimes laugh outright, that they may not be thought deficient in sympathy.

The whole group is excellently well brought together, and well *kept* together. Here is unity of plot and action.

The under-plot consists of "Old Jemmy," the gingerbread-man, who used, a few years since, to be so full of his quips and cranks, that he was the delight of his young customers, now smoking his pipe, and calmly smiling at the fun; while a dog, encouraged by a wanton boy, steals a slice of gingerbread from Jemmy's basket.

The whole is painted with great attention to Nature, (except that the bow-window of the public-house is a little out of perspective;) and the effect of the various colours employed by the artist is thoroughly studied. As in arranging precious stones for effect, a skilful jeweller would place an emerald near a ruby, the broad and bright-red waistcoat of him who is about to throw the quoit, is contrasted by its antagonist colour in his green breeches; and the ideas of rapid action and intricacy are by such means extended to the colours, as well as to the forms of the composition, while a serene back-ground of grey and broken colours in half-tint, support those on the fore-ground, and harmonise

* The first page of the Catalogue informs the public, that Mr. Green is Treasurer of the Society.

the whole.—The accompaniments of ale-jugs, glasses, basket, &c. are painted with a degree of care, which may almost rival those of Mr. Heaphy.

On the merits of the remaining pictures from the pencil of Mr. Green, we have not room to expatiate. Their titles and numbers in the catalogue are as follow:

No. 123. *Cottage Children.*

142. *Gadshill and Carriers.*

144. *Entrance Gate of Allington Church.*

258. *Portrait of Major Sibthorp.*

281. *Portraits of Captain Patterson and Family.*

264 and 265, *Ditto of Charles Mainwaring, Esq. and Lord Monson.*

In viewing the "*Gleaners*" of Mr. J. HEWLETT, the flower painter of Bath, (No. 134), the irritated sense of vision seeks in vain for repose. Here is a pretty-faced girl, it is true; yet on the whole, and notwithstanding her charms, we are led to wish that a critic's rod possessed the power of transforming the roses and lilies of Mr. Hewlett's gleaners into such roses and lilies as we may term the natural productions of this artist's pencil. The latter will supply him, if we mistake not, with an abundant harvest, while his Gleaners will bring little grist to his mill.

Nos. 246 and 252 are entitled "*Flowers, a Composition,*" and "*Roses, a Composition,*" by the same artist, and painted with his usual ability in this branch of art. Between them hangs a performance (No. 253) which is simply called "*Flowers,*" by W. M. CRAIG.

In designating his picture, Mr. Craig seems to have reflected, that it is perfectly unnecessary to call a vase of flowers a *Composition.* As every lady, and even every flower-wench, who ties up a nosegay, *composes* the flowers of which it consists, it would be strange indeed, if a painter did not.

Mr. Craig's vase of flowers hangs, as we have said, betwixt Mr. Hewlett's "compositions," and is much better composed than either of them, both as to forms and colours. We are tempted to this comparison by the manner in which the pictures are disposed, as if to challenge comparison. It has much more of the scientific contrivance of a colourist, and is much more the offspring of a mind studious of contrasting and combining forms. Its near neighbourhood, makes Mr. H.'s *Flowers* (No. 246) look merely garish and pretty. In his *Roses,* (No. 252) which is the best of Mr. Hewlett's present productions, (though inferior in merit to the flowers which he exhibited in the first display of the British Gallery,) his colours are somewhat more vivid and powerful than in the former: the music of his art is louder, if not sweeter, but is still short of the rich, full, and mellow harmony of the performance of his rival.

In Mr. Hewlett's pictures, the spectator is entertained with the exactness of particular imitation, and his eye flies like the restless bee from flower to flower; but if the poet asks—

"Why has not man a microscopic eye?"

and answers,

"For this plain reason—Man is *not* a fly;"

we may rationally, as men, prefer the presiding science which Mr. Craig has discovered, and which has enabled him to display that full result of fine art, which the professor Barry was used to term totality, and which, in the higher walks of art, converts sense merely into a medium through which the mind is affected. The *tout ensemble* of Mr. Craig's flower-piece is grand, and it is not less beautiful in its parts, taken severally, than grand altogether. In the deep-red bosoms of his pionies and roses, fairies might long to sport and nestle, and bees might expect to sip their sweetest honey. It is, in truth, a master-piece of flower-painting in water-colours; and it would be truly to be lamented by every person of taste for this kind of art, and of disinterested motive, if such a painter should ever desert his *colours,* and play into the hands of trifling toymen and quacks, or should plant his flowers for the caterpillars of art.

Mr. HOLMES is generally reputed the Heaphy of the Bond-street Exhibition, though we think that in the shew of the present year, Messrs. Green and Richter

may fairly claim to share with him that honour. The subjects of his pictures are,

No. 145. *Mischievous Boys taking a Swan's Egg.*

157. *A Peasant smoking.*

191. *The Dead Lamb.*

223 and 235. *Portraits of two Ladies.*

He here displays all his accustomed excellence; but our limits allow us not to follow him in detail. The swans form a delicate and broad mass of light, and the attitudes and characters of the boys are accurately observed and carefully executed; the old peasant smoking, with his dog, and the furniture of his cottage, are exact resemblances of Nature; and the expression of sympathy in the girl and shepherd (in No. 191,) are much to be admired, particularly that of the girl, of whom the character is also well selected. The exquisite miniature painting which is here displayed in the old woman and dead lamb, particularly in the head and hoofs of the latter, and in the neck of the dog which stands mournfully by, will be a great treat to the admirers of this kind of art.

The powers of Mr. HUET VILLIERS, or VILLIERS HUET, whichever be the true reading, are various, and of considerable interest and extent. He exhibits

No. 65, a *Landscape.*

No. 187, *Old Oak in Oatlands Park.*

both of which are treated with considerable taste: the old shattered oak, thistle, and dock-weed, &c. in the latter, are exquisitely touched, and coloured with much truth.

His *Hebe*, No. 206, (a chalk drawing, assisted by a little delicate tinting,) is beautiful! and the exquisiteness and delicacy of her beauty, are harmoniously contrasted with excellent effect, by the grandeur and ruffled plumes of Jupiter's Eagle.

"The terror of his beak, and lightning of
his eye,"

surrounded by rolling clouds, are magically opposed to

"The bloom of young Desire ——"

and while the poetical spectator is impelled to recollect those admirable lines of Gray, the eyes of Hebe will irresistibly remind him also of many a line of Anacreon Moore—for here is all the voluptuous languor for which that gentleman's poetry is so justly famous. That Hebe herself has been sipping nectar, is but too sufficiently evident.

The remainder of Mr. Huet's performances, excepting a View in Hammersmith, No. 215, are Portraits, and Flowers, of which the force, truth, and delicacy, equally claim attention. He seems to touch a vernal blossom, an aged oak, or a celestial beauty, with equal felicity; so versatile and so various are the talents of this artist.

The numbers and titles of the rest of his pictures are as follow:—

No. 202, *Portrait of the Hon. Countess Hawarden.*

No. 205, *La Nouvelle Lune*—Why not in plain English, the New Moon?

No. 207, *Aurora; Portrait of a Lady.*

No. 210, *Portrait of a Lady of quality,* chalk drawing.

No. 213, Ditto, *of a Lady.*

No. 214, Ditto, *of Capt. Whittingham.*

No. 217, Ditto, *Mrs. Mills.*

No. 221, Ditto, *Major-Gen. Murray.*

No. 222, Ditto, *Madame de St. Marguerite.*

No. 255, *Flowers.*

Mr. KENNION exhibits,

No. 140, a *Cattle Piece,*

and the following pleasing views, in which the characteristic forms and touch of the branching and foliage of his trees are chiefly remarkable:

No. 148, *Eaching Bridge, Surrey.*

No. 186, *Lime Kiln near Cheltenham.*

No. 251, *Oak and Elms near Godalming.*

No. 254, *Southampton, from near Netley.*

Mr. LAPORTE presents us, as usual, with several mild and pleasing landscapes.

No. 57, is, *The Approach to Cork.*

No. 100, *A Scene in Northamptonshire.*

No. 113, *Loch Erne, Firmanagh, Ireland.*

But his principal performance is probably

No. 122, *A View of Peterborough;*

in which the effect of early morning is introduced:

"The grey-eyed morn smiles on the frowning night,
Chequering the eastern clouds with streaks of light."

The liberty, however, is taken of supposing the sun (or rather the sun's harbinger) to be a little to the northward of east, but the grandeur of effect which results, and to which the lengthened horizontal line of the nave of Peterborough Cathedral also contributes its share, is an ample justification of this liberty; and Mr. Laporte's success in the tone and colour of his sky, and relative tones of his water and landscape, is conspicuous and exemplary. Aurora has seldom been more ably depicted. The cool grey is exactly true to Nature at this early hour, and melts not less successfully into the mildly-warm light of the rising sun.—By the same artist are

No. 165, *Upper Lake of Killarney.*

No. 173, *West Gate, Canterbury.*

No. 177, *O'Sullivan's Cascade, Killarney.*

From the pencil of Mr. J. LESCHALLAS, we are presented with the following fancy subjects.

No. 136, *Children bestowing Charity.*

No. 146, *Old Chairs to mend.*

No. 185, *What a few for a Halfpenny!!*

No. 203, *A Woman selling Mackarel.*

No. 253, *A Man selling Herrings.*

No. 256, *A Cottage Door.*

No. 259, *A Fortune-teller.*

No. 263, *A Girl with Flowers.*

No. 266, *A Ballad-singer.*

Mr. F. NASH exhibits the following six pictures, and we are sorry not to see the label with the desirable four letters, even on his best performances.

No. 15, *Part of Westminster Abbey Church, from St. Erasmus's Chapel.*

No. 29, *Part of the remains of Lanercost Priory, Cumberland, with the tombs of the Dacre family.*

No. 43, *Harlech Castle. Evening.*

No. 57, *Inside of an Old Church* (Query, what church?) *in Wilts.*

No. 95, *The Choir of Canterbury Cathedral*, and

No. 137, *Ruins of Furness Abbey.*

Of these the Cathedrals of Westminster and Canterbury are the best, and the former the best of the two. In subjects of this kind Mr. Nash appears much more at home, than when he has to do with trees and broken ground, and the more irregular species of objects. He has here overcome the difficulties arising from multifarious parts and intricate perspective. In the former, the mild and clear light and colour which falls on the foreground, is particularly true to Nature, and manifests more refined judgment than often falls to the lot of so young an artist as Mr. Nash appears to be. It is precisely the tempered light which has passed through a lofty gothic window, and falls with diminished lustre upon the irregular surface of old stone pavement, and the tombs of departed abbots and warriors, and renders St. Erasmus's Chapel a peculiarly interesting and poetic foreground to the interior of Westminster Abbey.

The Choir of Canterbury Cathedral, bears a strong and accurate resemblance to the place, and the general idea of "the fretted roof and long drawn aisle" is well kept up: but in his interior of Furness Abbey, notwithstanding that the perspective of the principal arch is bold, and scientifically true, he is far less successful. The greens of his landscapes are here raw; his ivy clustres too much like the equally projecting curls of a neglected wig; and his foreground is too little in certain parts, and too pretty altogether.

His interior of Lanercost Priory is better, which we ascribe to its being more purely architectural; yet here we wish that his figures were better drawn, and that his distant walls were somewhat less vapoury. He appears in these passages of his Lanercost, to have looked at Glover's former productions, and to have caught the *excess* of his air tints; and hence the more distant ruins of the priory rather resemble the ghost of departed ruins, (if such a thing might be,) than the present ruins themselves.

Yet we must repeat of Mr. Nash's interiors, that on the whole they remind us more than any pictures of the kind that have lately met our view, of the days when Turner was accustomed to enter our Gothic Cathedrals, and spread around him a religious light, and teach us to venerate the architecture of our country.

(To be continued.)

CATALOGUE RAISONNEE.

POETRY.

The Pastoral Care; a Didactic Poem, in three Parts. Addressed to the Junior Clergy. 12*mo. pp.* 174.

The good intentions of the author of this *poem* seem to apologize for its deficiency in *poetry*. If he can teach the junior clergy their pastoral duties by lame metre, false metaphor, and careless phraseology, we shall heartily congratulate him on succeeding where many works of more apparent merit have, we fear, most lamentably failed in their purpose.

Ronald, a Legendary Tale; with other Poems. 12*mo. pp.* 106.

Nothing is more easy than the art of *rhyming*—nothing more difficult than the art of *poetry*; yet how many proficients in the former, of all ages and either sex, pretend to be wonderful adepts in the latter, and think that every two lines which they unwittingly unite together in the bondage of rhyme, are never to be put asunder, but are to beget fame—never-dying fame—in *seculum seculorum*. The present rhymer, it seems, is (or rather *ought to be*) a student of law, but pants ardently to become that Ovid which Pope tells us "was in Murray lost." But let the bright young man speak for himself; and we will leave our readers to judge whether he is most likely to become an Ovid or a Murray. We are free to confess our fears that he will never resemble either.

"Reader! I say, scarce yet a youth,
For *if indeed I must speak truth*,
Many of these have written been
Ere I had years yet told *eighteen!*
But now (a common fate) grown old—
Would you my age precise be told?
Dear, curious Reader! I shall be,
On my next birth-day, *twenty-three!*" &c.

Who does not admire that *legal* and *poetical* doubt concerning *truth*, in the second line? —But we seem to be trifling with our readers, in criticising such vile nonsense.

The Battles of Talavera; a Poem. Dublin. 12*mo. pp.* 39.

The style which the celebrity of Walter Scott's poems has rendered so prevalent, is here introduced as the vehicle of celebration. We, who consider the *manner* as injurious to the vivid figures and poetical descriptions which generally constitute the *matter* of the *Lay of the last Minstrel*, and of *Marmion*, cannot be highly gratified with a continuation of that *manner*, without the recommendation of new and impressive imagery. There is, in the poems of the modern Border Minstrel, a continued display of that genuine characteristic of true poetry, "*a rich simplicity.*" Few recent authors seem to be aware that *simplicity* can be *rich*. Of that *simplicity* of *nature* which is abundant in beauties of idea and of expression they are wholly unconscious; and therefore when they would write with *naïveté*, they affect to throw aside every embellishment, as if vacancy of thought and nakedness of diction had any coincidence with the ever-varying and luxuriant language of sentiment, tenderness and vivacity. The author of "*The Battles of Talavera*" is indeed not one of this squeamish class of modern poetasters: he abounds with imagery—*not his own!* and we frequently meet two or three of Walter Scott's metaphors contending for a line, or jostling against each other at the tag-end of a stanza: thus—

"And rising on *the storms of fate*,
His rapid genius *soars*,
Sees at a glance his whole resource,
Drains from each stronger point *its force*.
And on the weaker *pours*:
Present where'er his soldiers bleed,
He rushes through the fray;
And, *so the dangerous chances need*,
In high emprise and desperate deed.
Squanders himself away!"

No man who pretends to *think*, could *write* in this manner: but there are writers who, having no faculty in their minds of drilling the ideas with which they are fain to recruit their own vacant imaginations from the works of other authors, suffer them to rush out of their feeble cantonments *helter-skelter, higgledy-piggledy, one a-top of t'other*, to the perversion of meaning, the confusion of metrphor, and the destruction of common-sense. Were it not for this crash of imagery which so repeatedly recurs, we should be inclined to commend many passages which, taken separately, have considerable merit. The 18th, 22d, and the commencement of the 23d stanza, possess much animated description; yet in these, the author seems to delight in destroying the strength and beauty of every figure, by some wretched conceit or broken metaphor. Thus where he has told us—

"And when the fresh'ning breezes broke
A chasm in the *volumned* smoke,
Busy and black was seen to wave
The iron harvest of the field—"

in which passage, with the exception of the strange word *volumned*, and the low word *busy*, there is some degree of poetry, he conceitedly adds—

"That harvest which, *in slaughter till'd*,
Is gather'd in the grave."

Now, this *harvest* in a field of battle, even with its epithet *iron*, we have met with in various authors, and have understood it as metaphorically applied to the warriors; but when we are told of warriors *till'd in slaughter*, we must either consent to admire every thing that is incomprehensible, or else condemn with those who honestly condemn whatever is ridiculously absurd. We are informed that the author of this Poem is the well-known Mr. Croaker of Dublin, but we rather mistrust our information.

Poems, by Sir John Carr. 8vo. *pp.* 228.

Perhaps, in conformity with the titles of other works of this *illustrious* knight, the volume before us ought to have been called *The Stranger on Parnassus*. A sentence from his Preface will clearly prove that Sir John is but little acquainted with the language of that celebrated region. Of the Poems now "submitted to the public with all that diffidence," &c. he tells us that "they lay no pretensions to the *depth* and *solidity* of the *effusions* of the Muse in her elevated *flights*." Now, what sort of an *effusion* that may be which comes from any being in an *elevated flight*, and possesses *depth and solidity*, we do not very well understand, and are very unwilling to guess. We fear that our knight-errant *caught a scent* of his metaphor by the side of a dyke, when he was a *Stranger in Holland*. It has certainly nothing to do with the language of Parnassus.

The author wishes "to *class* 'his verses' in *that niche* which is appropriated for the reception of the light and playful *vers de société*." That *niche*, we are inclined to think, is one of the *pigeon-holes* of his own desk. The *impromptus*, the complimentary rhymes, and the occasional stanzas of such Pegasean chevaliers as Sir John Carr, ought to be kept as sacredly from the public eye as the *amulets* of the knights of old, the disclosure of which produced inevitable disgrace. Still we are not so fastidious as to reject such *metrical conversation pieces* entirely; but we must assert, that unless these *bagatelles* are finely pointed, and exquisitely polished, they are insufferable.—Conceit, false metaphor, and inflated sentiments must never be considered as embellishments. We must have no *feelings caressing genuine tears* *; no *showers embracing lily leaves* †; no *sun aiding the lily, by drinking up the drops that laid it low* ‡; we must not hear *the dress* § of nature, nor any other dress, told *to think*; nor must *Fancy enfold any relics in waves, like gem in amber* ||. No—in the lightest trifles of poetry none of this glittering nonsense must be found: every thought must be

* Page 2. † Page 43. ‡ Page 124. § Page 125. || Page 126.

bright, indeed; but that brightness must be clear. The ray reflected from a dew-drop is beautiful, because instead of dazzling us, it divides itself into all its component colours.

Yet while the Poems of Sir John Carr are thus abundant in conceit and false ornament, we are happy in perceiving that some passages are expressive of genuine sentiments, in the true language of poetry.—True poetry is nothing more than the language of the heart. Sincerity of feeling always bestows a strength of utterance which the utmost fervor of imagination can never equal. There are some passages in the lines on the death of the author's brother, (p. 4, &c.) which are really pathetic, and are undoubtedly the effusions of a sensible mind and affectionate heart. In most of the Poems the versification is smooth; and if the *knightly* author would condescend to write less like a *knight*, and more like a human being, we think that he would exhibit powers far above the common level. The following is a very fair specimen of this writer's poetical talents. The stanzas are the latter part of a poem *on the Death of the Lady of Lieut. Col. Adams, who lately died of a Decline, in the East Indies:*

"Long hov'ring o'er his fleeting breath,
Love kept his watch in silent gloom;
He saw her meekly yield to Death,
And knelt a mourner at her tomb.

"When the night-breeze shall softly blow,
When the bright moon upon the flood
Shall spread her beams, (a silv'ry show,)
And dark be many a waving wood—

"When, dimly * seen in robes of white,
A mournful train along the grove
Shall bear the lamp of sacred light,
To deck the turf of those they love—

"Then shall the wood-dove quit its bower,
And seek the spot where she is laid;
Its wild and mournful notes shall pour
A requiem to her hallow'd shade.

"And friendship oft shall raise the veil
Time shall have drawn o'er pleasures past,
And Fancy shall repeat the tale
Of happy hours, too sweet to last!

"But when she mourns o'er Mira's bier,
And when the fond illusion ends,
O then shall fall the genuine tear,
That drops for dear departed friends!"

We shall say nothing to the complimentary lines addressed to that other illustrious knight Sir Robert Ker Porter, upon his approaching nuptials with the Princess Shebatoff. We doubt not that the Chevalier of the Imperial Order of St. Joachim has returned the compliments in lines of equal brilliancy. Happy, happy times! when knights-errant, instead of breaking a lance together when they meet, are contented to break Priscian's head in a stave or two of false metre. We cannot, however, pass over the next Poem without advising Sir John to learn French before he ventures to translate from it. An inscription on the pedestal of a statue in a garden at Utrecht begins thus:

"N'offrant qu'*un cœur* à la Beauté †,"

which our knight so dreadfully misunderstands, that he gives us the following couplet for its corresponding meaning in English:

"To Beauty give your heart, your sighs,
No other off'ring will she prize."

Sir John is also the first author known to us, who has ventured to set Painting above Poetry. This he has done in *Lines to a promising young Artist*, where perhaps he meant to encourage the pencil of

* Mr. Hodges, in his Travels in India, page 28, mentions, that between Banglepoor and Mongheir it is the custom of the women of the family to attend the tombs of their friends after sun-set; and observes, "it is both affecting and curious to see them proceeding in groups, carrying lamps in their hands, which they place at the head of the tomb."

† The original possesses a simplicity which has been much admired; and as we have

his young friend with this and some other poetical flights beyond the strict limits of truth. Few artists will be inclined to join him in the following encomiums on British patronage:

"Thrice happy Britain! in thy favour'd isle
The sister Arts in health and beauty smile!
Tho' no imperial gall'ries grace thy shores,
Tho' Wealth *the public bounty seldom* pours,
Yet *private taste rewards* the painter's toil,
And bids his genius grace his native soil."

Such flattery to the poor, niggardly, bargaining patronage of the present day, is worse than servile—it is wicked. It is such *lick-trencher scamps*, who run with their pockets full of ready-made praise, from one country to another, on whom *private patronage* is bestowed; while laborious and persevering Genius pines unnoticed, whether the pen or the pencil be the instrument of its exertions.

DRAMATIC PIECES.

Grieving's a Folly: a Comedy, in Five Acts: as performed by the Drury-Lane Company, at the Lyceum, Strand. By Richard Leigh, Esq.

Modern comedies are nothing more than modern novels in dialogue:—silly, sickly medleys of puns, extravagant buffoonery, and false sentiment. This, which we have just read, is one of the most vapid of the whole species. The story is unnatural, and the characters more absurd, than the worst of *nature's vilest journeymen* could ever have contrived.—From what we have heard of the author, we should suppose him to be old enough to know what sort of beings men and women are; but we find him going to the common sources of study, the ridiculous romances of the day, in which, beings who resemble nothing upon earth are reported to do things which never were done, and to say things that never were said.

Venoni, or the Novice of St. Mark's; a Drama, in Three Acts. By M. G. Lewis.

Mr. Lewis says, in his preface to this piece, "This will, probably, be the last of my dramatic attempts. The act of composing has ceased to amuse me: I feel that I am not likely to write better than I have done already; and though the public have received my plays certainly with an indulgence equal to their merits, those merits, even to myself, appear so trifling, that it cannot be worth while to make any further efforts at the attainment of dramatic fame. Here, then, I shall take my leave of the Theatre, probably for ever."—Now, all this sounds in our ears like the peevish, petulant complaining of a petted little girl, who wants to be courted to do that, which she is all in a fidget to do of her own accord. It seems to us to be a trap to catch the drawling lamentations of *monk-loving* misses, who may exclaim, "Lor', Mr. Lewis, so you really don't write any more?—Lor,' how shocking!—Lor', I'm sure it will be impossible to think of going to the play, or of reading a word, if you don't write—Lor', how shocking!"—For our own part, if Mr. Lewis can do no better than translate such wretched things as "*Les Victimes Cloitrées*" so wretchedly as this before us, we sincerely hope he will keep his word. The

---

seen a close and correct translation so it in a gentleman's villa not far from London, we shall present both the French and English to our readers:

N'offrant qu'un cœur à la Beauté,
Nud comme la Verité,
Sans armes comme l'Innocence,
Sans ailes la Constance,
Tel fut l'Amour dans le siecle d'or,
On ne le trouve plus, quoiqu'on le cherche encor.

Off'ring to Beauty but one heart,
Naked as Truth can be,
He bears, like Innocence, no dart,
No wings, like Constancy:
And this was Love, in golden days of yore—
We seek him such, but find him such no more.

loss of the author of Alphonso, and of Adelgitha, we might regret, but we could very well spare the author of Venoni. Could we, for a moment, conceive the plot of this play to be probable, we would acknowledge that the extravagant agents which conduct it are also natural; but whatever may be the case in Italy, such beings are not common enough in England to excite any general commiseration. There are madmen and villains, we know; but scenes, which cannot occur, unless the principal characters are arrived at the highest delirium of madness, or the most consummate excess of villainy, can never be justly pathetic, because they can never be in unison with the hopes and fears of those who behold them. The language of this piece is energetic, but it is frequently the vehicle of false and over-violent sentiments. The third act, either in its *first* state, or as Mr. Lewis, in "*twenty-four hours*," re-composed it, is little else than a farrago of absurdities. This "*setting the brain to work*," and re-writing whole acts, after the play has been three nights before the public, is a most unprecedented measure: the public have nothing to do with the *workings of any man's brain*. If a cask is set before them, which has not *worked* itself sufficiently clear, they are not to take a *trial glass* now, and another *trial glass* in twenty-four hours: no, the *muddy stuff* must be thrown away at once, without any of the hasty *refining* of such *spirit-manufacturers* as M. G. Lewis, Esq.

The Foundling of the Forest: a Play in Three Acts, as now performing at the Theatre Royal, Haymarket, with the most distinguished Success. By William Dimond, Esq. Author of 'Adrian and Orrila,' 'Hero of the North,' 'Hunter of the Alps,' &c. &c.

Consummate villainy and romantic grief are the stilts upon which our modern authors pretend to exhibit human nature. A sort of bombast prose, worse than the broken German of Dr. Render's *Don Carlos*, has become the regular diction of the drama; and that elegant and classical metre in which Shakespear, Ottway, and Rowe made their characters utter the sentiments of nature, is wholly discarded. The play before us is a rich specimen of that excellence which meets such *distinguished success* on our theatres, that no man, who has studied either Shakespear, or that book of nature which Shakespear studied, will now venture to rival the inimitable productions of the day. The extravagance of this *Foundling of the Forest* can only be equalled by the shameful licentiousness and indecency with which those parts which are intended to be comic most shamefully abound. It is, upon the whole, a vile composition.

The Abdication of Ferdinand, or, Napoleon at Bayonne; an Historical Play, in Five Acts.—Whatever Profits the Author may share from this Play, will be given to the Spanish Fund.

It has, indeed, been a trial of the charity and patriotism of our patience, to read this historical play to the end. We hope, for the sake of the Spanish Fund, that there may be many readers endowed more with the virtue of Job than ourselves. He must have the cause of Spain at heart, indeed, who can stomach such expressions as these; "By the *configuration* of my thoughts,"—"And stranger it would be, if he were *usual* as other men"—"Infirm with years, and *usual to suffering*." Napoleon, embracing Charles, says, "I *gather you* to this security."—A perpetual affectation of metaphorical diction leads the author into continual absurdities.

BOOKS OF ART.

Religious Emblems; being a Series of Engravings in Wood, executed by the first Artists in that Line, from Designs drawn on the Blocks themselves by J. Thurston, Esq. The Descriptions written by the Rev. J. Thomas, A. M. Chaplain to the Earl of Cork and Orrery. Large Quarto. 1809.

This series is by no means a connected series of religious emblems; nor must the reader suffer himself to expect, as from pe

rusing the title page, and finding the word *series* there, he might, any thing like a poetical or orderly system of Christian allegory. On the contrary, either because the bounds of space and time are here overstepped, or for some other reason—or for no reason at all—no kind of sequence, or order of succession, is here attended to. In the first plate, Death is represented as destroyed; and, in the last, he is alive and well again—quite hearty—and employed in felling timber. Sin also is destroyed in plate I. yet she soon revives again, and is either more openly or more latently busy through the rest of the book. On the whole, it does really seem as if the Rev. Mr. Thomas had here, as on every other occasion throughout the work, as far as respects arrangement, been governed by a Scripture text, *videlicit*, "The first shall be last and the last shall be first."

The emblems are twenty-one in number, with a short description of each: and he who expects merely to see some good detached designs from the pencil, or rather, graphic stylus, of Mr. Thurston, and to see them as well engraved as any thing he has yet seen *on wood*, will not be disappointed.

Seventy-eight Studies from Nature, engraved by William Green from Drawings made by himself. Price Five Guineas, Boards. Large Folio. 1809.

These Engraved Studies, as they are termed, are no other than Etchings in soft-ground, but are executed with considerable freedom and fidelity, and are excellent *fac similes* of Mr. Green's Sketches from Nature, which at least all those who have visited Ambleside, and seen his Exhibition there, must have beheld with pleasure.

In a few instances Mr. Green has attempted extensive scenes; but in these—not from want of skill in the artist, but from the mere inadequacy of this mode of art to the due expression of space—he has been less happy than in his select foreground studies, which consist of such objects as cottages, bridges, rocks, gushes of mountain torrent, and foreground weeds and foliage. Here he displays great truth and beauty, and produces excellent lessons for the imitation of students in landscape, for which purpose they are deservedly recommended in the Introduction.

But they will also form valuable memorials of the local scenery in the neigbourhood of the lakes of Westmorland and Cumberland, to those whose who have delighted, or may in future delight themselves, with a Summer or Autumnal tour in those regions of picturesque pleasure.

Beside the seventy-eight etchings and Introduction, the volume contains a short account of the subject of each plate, and concludes with some useful observations with respect to the mode in which plantations ought to be conducted.

Many of the cottages represented are well known to the tourists of the Lakes; and among them is the little Inn at Buttermere, of which the author says,

"This is the place where Mary Robinson, sometimes called the Beauty of Buttermere, for some years made a considerable advantage of public curiosity. She was a fine girl at fourteen, and a most interesting one at sixteen: what she was between that age and twenty-four, is not known to the writer; but at the latter period many were disappointed; and Mary must certainly have been distressed, when the undiscerning were eager to be informed from herself, when modestly waiting upon them, how they might procure a sight of *the Beauty!*"

VOYAGES AND TRAVELS.

Travels through Denmark and Part of Sweden, during the Winter and Spring of the present Year, (1809:) *containing authentic Particulars of the Domestic Condition of those Countries, the Opinions of the Inhabitants, and the State of Agriculture. By James Macdonald. In two Volumes, 12mo. pp. 226 and* 184.

Although we are willing to confess that these two small volumes contain a considerable portion of information and interest, yet we are obliged to say, that the title is much

too big for the contents. The *knighted* bookseller is fond of titles; and however that which dropped from the royal sword upon his own shoulders may or may not have increased his own value, he knows very well, that a book may be wonderfully enhanced in price by a well-rounded, *catch-penny* title-page. Who would imagine that the present *traveller*, like Johnny Gilpin, was forcibly hurried through a country which he did not intend to visit? A man who is carried as a prisoner from the Scaw to Copenhagen can hardly be allowed to call his journal *Travels through Denmark*, or the few observations which he can collect, without any knowledge of the language, from the soldiery by whom he may be surrounded, *authentic particulars*, &c. Mr. Macdonald seems, indeed, to be an intelligent man; and has, undoubtedly, gleaned more than could have been expected from the manner of his journey; and we have no doubt that his *title-page* was fabricated for him at the wonder-working manufactory in Bridge-street.—The description of the loss of the vessel (the Johns, of Leigh) in which Mr. Macdonald had embarked, is an awful and pathetic narrative; the detail is throughout clear, simple, and explicit; and his situation, in some degree, gives a novelty to the work, and creates an independent interest. The present poverty of the Danes, the high price of every necessary, the inundation of paper-money, which is daily sinking in value—the strong prejudices, and the empty vanity, rather than the spirit of patriotism, which seem to blind this people to their true situation—are so many political traits which present indeed a dreadful picture of a ruined nation, even in the hasty sketch which Mr. Macdonald has been able to draw. How far Britain may have been accessary to this ruin, we shall not here pretend to investigate. Had the court of Denmark placed itself under the protection of England, and suffering the temporary possession of Jutland and Holstein by the arms of Bonaparte, remained the sovereign of Zeeland, Norway, &c. it certainly would have suffered less. Its commercial revenue would then have far surpassed the poor produce of its imports, with which it now oppresses its miserable subjects. But, without examining how far the court of Denmark had the power of choosing between two evils, we are ready to agree with our author, that having once obtained possession of Copenhagen and the island of Zeeland, we ought to have retained that possession. The idea of a French army crossing from the main land, appears to be futile: so far from the winter season ever being accompanied with sufficient frost to render the communication across the Belt more constant, we find that the shoals of floating ice, which in the most intense winters choak up those straights, render them impassable in any manner. The method of sending post letters and passengers over the Belt at that season is particularly described in this work, and is enough to take away all apprehension of a number of soldiers being conveyed over it.—A small part of the second volume is occupied with an account of a short journey in Sweden, from Helsingborn to Gothenburg. Considering how small a portion of that kingdom is the subject of Mr. Macdonald's observations, we think that he has contrived to give those observations much interest. He judiciously expatiates on the precarious situation of Sweden, as a political power, and sets before us such features in the characters and manners of the inhabitants as fell under his particular notice.

MISCELLANIES.

Fungusiana; or, the Opinions and Table-talk of the late Barnaby Fungus, Esq. To which are prefixed, some Biographical Notices, respecting the true Origin of that Gentleman. The whole proving, beyond all Doubt, that from this surprising Genius were derived most of the prevailing Habits, Sentiments, and Refinements of Modern Times. 1809. 12*mo. pp.* 192.

In this little work there is much satiric humour. The *biographical notices* contain some rude outlines of character that do not less amuse by bordering on *caricatura*. The *essays* or *opinions* are ingeniously ironical, and contain many truths, which are exhi-

bited in a ludicrous and forcible manner. The *projects, hints, and proposed societies* display a laughable picture of the present state of society in this metropolis. We will not say that it will bear comparison with the humorous effusions of Swift, yet there are certainly some parts which even Swift might have owned without any discredit.

Green-room Gossip; or Gravity Gallinipt: a Gallimaufry, consisting of Theatrical Anecdotes, Bon Mots, Chit-chat, &c. &c.

After a long, nonsensical title, this catch-penny publication presents a farrago of jests from old jest-books, newspapers, &c. The kings and queens of the play-house are, however, such an interesting race of animals, that perhaps even this worst collection of their worst witticisms may have its admirers.

CATALOGUE OF NEW MUSIC.

Beethoven's Grand Symphony (Sinfonie) in C.; arranged for two Performers on the Piano Forte, by D. Brugier. 5*s.*

This delightful and masterly Sinfonie has always been so great a favourite, that we are surprized it has not been arranged before. The task has been at last undertaken by Mr. Brugier, and he has executed it with a considerable degree of judgement and ingenuity. The Sinfonie itself is by far the best ever produced by Beethoven, and is, in our opinion, not at all inferior to those by Haydn and Mozart.

One of the most remarkable features is its beginning with a discord!—Each of the movements are excellent in their peculiar styles, and the whole production evinces an union of taste, originality, and science, very rarely met with.

The score exhibits many fine ideas, the principal effect of which depends on the contrast of the *stringed* with the *wind* instruments.

These passages of course lose much of their beauty in the present arrangement; however, by judiciously making the arrangement as a Duett, Mr. Brugier has at least *retained* these passages, and given a fullness and grandeur to the Sinfonie more nearly resembling the effect of an orchestra than could possibly have been done, had the arrangement been made for a *single* performer.

Up all Night; or, the Smugglers' Cave: a Comic Opera, in Three Acts, composed by M. P. King. Price 15*s.*

Although this was the first of the *English Operas* which made its appearance this season, it was only a short time since we received it. We regret this circumstance the less, because we had been present at an early representation of it. We had certainly entertained a higher opinion of Mr. King's abilities as a composer of theatrical music, from his debut in "Matrimony." The overture is quite *à la Reeve;* the middle movement, marked *andante,* is not at all appropriate; it rather ekes out the quantity, than assists the *main action* of the piece, and, like a vicious episode, *hangs heavy on the ear.* The succeeding movement, which is dignified with the name of *Finale,* is a mere jig in the worst common-place style. The *Sestetto,* (p. 58), is a complete deception. There are *apparently* seven parts, but *really* only four; and, in many passages, not so many. Does Mr. King mean to say that the two trebles are two distinct parts?—There is some character in the song, *On Board the Termagant,* sung by Mr. Smith. It is bold and manly, and such as might be expected from the mouth of a sailor. We dislike, however, the manner in which the word VICTORY is accented in the last cadence to the first verse. The Duett, *A Damsel once,* begins exactly like Fawcett's

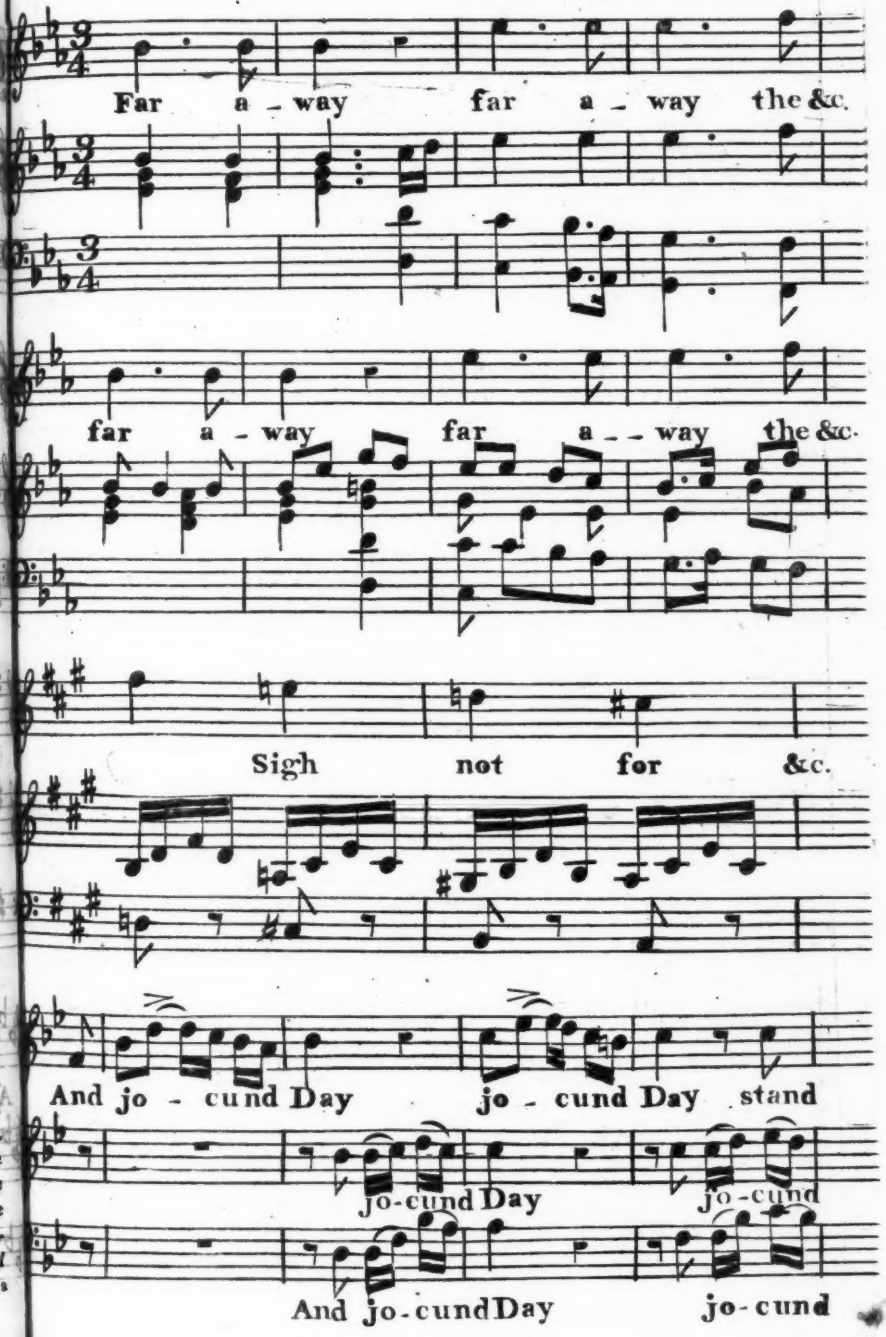
Far a - way far a - way the &c.
far a - way far a - way the &c.
Sigh not for &c.
And jo - cund Day jo - cund Day stand
Jo-cund Day Jo-cund
And jo-cund Day jo-cund

song in The Exile, *Young Lobski.*—We do not wonder that *All her Tears no pity moved,* since we are told, that *Fal, lal, la, la, was her sad lay.* We are surprised at the popularity which we are told the Rondo, *Sigh not for Love,* has acquired. The arrangement is evidently a copy of Mr. Davy's *Just like Love,* and its melody is a still more obvious plagiarism. It is the old song of "At the Siege of Belleisle." In the accompaniment of the passage marked C, plate 1, there is the effect of no less than four consecutive fifths produced. We have looked over this piece for an ark to save a remnant—for one olive branch, as a resting-place on which to *pillow our disappointment,* but in vain. We cannot recommend what we disapprove; we cannot praise what we cannot admire. Our praises and censures would be alike worthless, if we could, from any consideration, sacrifice a sense of duty to our wishes, or give up our judgement to a desire of encouraging compositions that assist to deprave, at the same time they disgrace, the public taste. We sincerely wish well to a revival of the English Opera; and when any thing that deserves the public approbation shall appear, it will be found that we are not "niggards" in commendation.

Instructions for the German Flute, by T. Monzani. 2nd Edition. Price 6s.

The principal additions that have been made since the first publication of this work, are several new shakes, made by means of the C natural key; six examples to illustrate its use; six easy cadenzas for the study of young concerto-players; and six simple airs, with appropriate cadenzas introductory to the subject. The most material points aimed at, are a method of tonguеing all kinds of passages; a complete set of gamuts, explaining the different ways of fingering the same note or shake, made to render difficult passages more easy of execution. In these objects Mr. Monzani has succeeded. We can excuse some inaccuracies, because Mr. Monzani is a foreigner; particularly in lines 9 and 10, page 4, and second printed line, p. 7; but what information can a student receive from the following explanations of the Italian, and *other words,* used in music.

Andantino—slower than andante.—We have always understood it to mean the direct contrary of this.

Cappricio, an *extemporary,* a piece of music, in which the author, *without any restraint of music,* gives liberty to his fancy, and to all the fire of his imagination, *nearly* the same as a prelude.

Crescendo poi calando, a gradual *rise* and *fall* of the sound.—Surely this must be inaccurate; the sound cannot *rise* or *fall,* without changing the interval. It should have been explained thus—A gradual increase and decrease of the sound.

Loco—after having played the octave above.—We think this very obscure. When a passage has been played an octave higher, the word *Loco* signifies that the notes are to return to their original situations.

March (the English word) is explained thus—*Marcher,* a military air, generally played by wind instruments.

Smorzatto, or *Smorzando,* smoothening away the sound.—We apprehend it means, to diminish the sound gradually.

Legato, we are informed, is *slurred,* a style of playing in opposition to *Staccato;* and, upon referring to *Staccato,* we are told it is the reverse to *Legato.*

Notwithstanding these inaccuracies, the work has great merit, and will be found highly useful to the young student. We are not surprised at the second edition being called for.

The Jubilee: a Song and Chorus. Composed by G. Lanza. Price 2s. 6d.

This effusion of loyalty is scarcely amenable at the bar of criticism; but having come before us, we must state our opinion. It is more ornamental than useful. The title-page led us to no favourable opinion of the inside. "Good wine needs no bush." We do not comment upon the absurdity of making the symphony longer that the song itself, but so it is. The song is quite long enough. We should have been better satisfied if (taking advantage of the feelings of his Majesty's *loyal subjects*) the composer had made it

merely a *catch-penny*; but to catch *half-crowns!!* 'tis really too bad.

In the 7th bar, page 4, there is an F sharp in the treble accompaniment, which is not resolved. In the last line, same page, *Georgé's* must sound as if it were intended to convey the idea of *little George*. The last phrase of the melody, which is harmonized, and entitled a Chorus, reminds us of Rule Britannia; and the *coda* at the end is very similar to a passage in Handel's Coronation Anthem. We have given our opinion of it as a whole.

A Duett Concertante for the Piano Forte and Violin, or Flute, with Accompaniments for two French Horns, ad libitum. By F. Fiorillo. Price 7s. 6d.

This is a very superior production. The violin part is quite obligato, and is adapted with so much skill as to satisfy us Mr. F. is a fine performer. There is considerable originality displayed in each of the movements. It is altogether brilliant and masterly.

The Thrush: a Rondo, for the Piano Forte, with an Accompaniment for the Flute or Flageolet. Composed by John Parry. Price 3s.

This is light and pretty. The flageolet part is showy, and so contrived that it may be played by a third hand on the additional keys of the piano-forte. The modulation to the key of A major, page 7, is rather too abrupt. In page 8, bar 11, we think it would have a better effect if the D in the flageolet part were to descend to C; as at present the terminating upon D is unsatisfactory. Mr. P. not having aimed at any thing very great, has succeeded to the extent of his endeavours.

Ah se M'Adora, Aria con Harpà ou Piano Forte accompaniamento. Compositù du Sr. Mayer. Price 1s. 6d.

Sr. Mayer's style is distinguished by a peliar elegance, of which this Aria is a very favourable specimen. There is one passage which, however, is rather unpleasant. It is where there are consecutive octaves between the bass notes and the accompaniment, bars 15 and 16, page 1. The same defect occurs each time the passage is repeated. One of its best features is the unexpected introduction of the F sharp, bar 4, page 2; and the temporary modulation to the fourth of the key, which immediately succeeds. With the most simple harmonics, Sr. Mayer produces the most delightful little airs. The frequent recurrence of the same passages, without being monotonous, affords an excellent opportunity for the vocal performer to display her taste. We shall like to review more of this gentleman's productions.

L'Incanto. Serenade for two Performers on the Piano Forte, and one on the Harp; in which are introduced an Irish and a Neapolitan Air. By P. Antoni Corri. Price 6s.

The subject of the andante with which this Serenade begins seems to be taken from the song of "In my cottage near a wood." It is however well arranged, as is also the Irish air, *Dear Creatures, we can't live without them.* The latter is a movement in 6-8, and possesses much of the characteristic features of the Irish melodies. The Neapolitan air is La Tarentella. It is distinguished by a peculiar quaintness, and derives much of its character from the seventh of the key being occasionally a half and a whole tone below the key note. The harp has a very prominent part: the whole is light and pleasing, and conveys a very favourable impression of the abilities of the composer.

The Boon of Bacchus: a cheerful Glee for three Voices. Composed by W. Dixon. Price 2s.

This is a very clever convivial glee; the first movement is in common time, and the second in 6-8; the latter is the best. The division at the word "abound" is rather *antique.* The suspension upon the sixth, at the pause, last bar, page 2, has a good effect. There is too much repetition in the coda. It is the first time we have been in Mr. D.'s company, and we are glad to find his production so intirely free from grammatical errors.

Sul Margine d'un Rio: a Duett for the Flute and Piano Forte. By F. Lanza. Price 5s.

Mr. F. Lanza is entitled to considerable praise for this production. The manner in which this pleasing air is arranged is such as to confirm our opinion of his talents. We discern the *early dawnings* of merit, and that of a superior nature. The first, second, fifth, and eighth variations are the best. The conclusion also of the ninth is excellent. They evince science, taste, and originality. The tenth variation is a very ingenious introduction of the subject, under the form of a waltz. The flute part is uncommonly brilliant, and the passages are adapted with peculiar skill, so as to display that instrument to the greatest advantage. We sincerely hope this rising composer will meet with the encouragement he deserves. It will be a reflection upon the musical taste of the public if he does not.

Dammi la cara Mano, TERZETTO, *con accompaniamento di Piano Forte e Flauto e Violino Obligato. Composto da Sig. Puchitta.*

There is nothing particular to admire in the first part of this composition. The first bar of page 3 contains a cadence which has long been exploded among musicians of the least refinement. We have heard the descending semi-tones introduced as a cadence, by indifferent, and bad singers, to our very great annoyance, but we never heard this from a good singer. The allegro, beginning page 4, is spirited; the parts are kept distinct, and judiciously adapted to the words. The second notes of the treble accompaniment, bar 2, page 6, should be C and A instead of D and B, or the D and B should ascend to E. The same defect occurs in page 8, bar 5. This last movement is shewy in the vocal parts, and derives an additional brilliancy from the judicious manner in which the accompaniments are adapted.

Jansen's complete Preludist for the Piano Forte: consisting of seventy Preludes in all the Major and Minor Keys. Price 8s.

These Preludes begin with the most simple chords and arpeggios, and extend to the most brilliant and difficult passages. It is one of the most complete and scientific collections we have seen, and displays Mr. Jansen's intimate knowledge of the instrument for which they are composed.

Two Sonatas for the Piano Forte. Composed by W. Ling. Op. 5. Price 5s.

These are easy and familiar in the style. Mr. L. seems to have intended them for beginners, to whom they will, no doubt, prove useful. We think the second is the better of the two.

The Maid whose Heart was cold to Love: a Ballad. By Sir J. Stevenson. Price 2s.

This is a very pretty ballad, although we discover nothing very new either in the melody or the arrangement. We are surprised Sir J. Stevenson has not introduced some variety in the accompaniments, as the accompaniment of each verse is a counterpart of the others. The best part is where the temporary modulation takes place, to the second of the key, bars 6 and 7, p. 4.

If then, to love thee be offence: a Ballad, with Accompaniments for the Piano Forte. By Sir John Stevenson. Price 2s.

The first part of the ballad is the best; the latter is rather common-place. In the accompaniment of the 9th bar, page 4, we should prefer a D as the third note of the bass, instead of B: the preceding discord of the second would be then more satisfactorily resolved. The same want of variety is discernible in the accompaniments of this ballad, as in the last we noticed.

The Day of Love. The Music and Words by Thomas Moore, Esq. Price 2s.

This is a very elegant ballad; the words are tasteful, and perhaps more chaste than the generality of Mr. Moore's poetical effusions. The music is appropriate, but we think the minor mode might have been introduced with effect in the last verse, at the words "but evening came." The principal characteristics are simplicity and expression.

Fanny, dearest: a Ballad. The Words and Music by Thomas Moore, Esq. Price 2s.

The subject of this ballad is impassioned and expressive; there is also more science discoverable in the treatment of it, than we usually meet with in the compositions of this gentleman. There is, however, rather too much repetition of the chord of the diminished seventh. We have to notice the same want of variety in the accompaniments.—Where the melody is so often repeated, we think the composer should relieve the monotony which that repetition occasions: besides this consideration, which we think by no means trifling, it would enable the composer to adapt the music to the variety of sentiments which frequently occur in the different lines.

Sweet is the Tear: Canzonet, with Accompaniments for the Piano Forte or Harp. Composed by K. Staes. Price 1s.

For reasons which we stated in a former Number, we think this should rather be entitled a song than a canzonet. There is some contrivance in the accompaniments, which is, perhaps, the highest degree of merit we can attach to this composition. The best passage is the last bar but one of the last symphony.

My Lodging is on the cold Ground: arranged as a Duett for the Piano Forte, by M. P. Corri. Price 1s. 6d.

The arrangement of this favourite air does more credit to Mr. Corri than any of his other performances. He might have introduced the subject in the key of three flats, with considerable effect, in page 5, where he modulates to the relative minor. The subject is only introduced at present in the tonic and dominant. There is rather too much repetition of the same passages in the second line of page 5. We have seen this melody much better arranged by Mr. Dussek, as a rondo.

Three favourite Pandean Airs: arranged for the Piano Forte and patent Flageolet or Flute. By Mr. Corri. Price 3s.

This is certainly *not* written by the composer of the music of the *Travellers*. The third is the best.

The Prayer of our Saviour Christ, in the Garden of Gethsemene.

In our review of *Eloi*, of which this is intended for *a companion*, we observed, that it must have been published some time previous to the commencement of our Review. Flattered by the attention of the Composers, and the most respectable Music-Sellers, who send us copies of all the new publications, we take the opportunity of stating, that we shall be obliged by their *not* sending works that were published previous to the month of May 1809. As this Prayer is the text of our present comment, we shall merely observe, that the words are well conceived, and well expressed. The leading point of the chorus is, however, old and hacknied; but in some of the succeeding passages, the discords of the 9th and 4th are well introduced; but the termination is rather too abrupt.

The Singing Girl; a favourite Ballad, with an Accompaniment for the Piano Forte. Written and composed by W. T. Rhodes. 1s.

We shall say but little of this ballad, because "the less that is said, the better." The passage in the 5th and 6th bars of the symphony, and repeated by the voice, last line of page 2, is taken from Storace's song of "Little Taffine." The compass is likewise beyond the generality of little singing girls' voices. The passage in bars 1, 2, 3, and 4, in page 3, is truly contemptible.

The Battle of Corunna; written and composed by Mr. Dibdin. 1s.

We cannot compliment Mr. Dibdin upon this production, and we know him too well to believe he would be flattered by praise which he must be conscious was unmerited. The passage particularly objectionable is the one contained in bars 4, 5, 6, and 7, page 3, where the naked fifths introduced in the accompaniment have a very *thin* and disagreeable effect. The passage itself is hacknied

common-place. The last note of the violin accompaniment, bar 11, and the first note of bar 12, form consecutive fifths with the bass.

Viotti's three Trios, arranged as sonatas for the Piano Forte, with accompaniments for the Violin and Bass, by J. L. Dussek; new Edition. 8s.

At one period, Viotti's music was very fashionable, owing, we presume, in a great measure, to the superior style in which he performed it. His productions were originally written for the violin. Mr. Dussek has arranged several of his compositions for the piano forte. Among the rest, a concerto in G, which will be admired as long as a taste for what is natural and elegant remains. We are at a loss to account for the present neglect of Viotti's music, which is very superior to most of our modern productions: but we resemble the Athenians, who were always enquiring for something new; and the musical appetite of the present day must be perpetually solicited by novelty, to the great neglect of excellence. We are obliged to Mr. Lee for this new edition of these three Sonatas, which are a very pleasing specimen of Mr. Viotti's peculiar style, and are admirably arranged by Mr. Dussek. We give the preference to the second, the introduction to which is similar in style to a *diapason piece*. The subsequent movement, marked *allegro vivace*, is full of energy, and abounds with tasteful passages; and the last movement, *allegretto*, is capricious and playful.

Leiber Augustine; a German Air, with variations, for the Piano Forte or Harp, with a Flute Accompaniment; composed by J. W. Holden, Mus. D. Oxon. Price 3s.

We expect that gentlemen who *write themselves Mus. D.* should leave to young tyros the employment of arranging the ideas of other composers. It certainly puts *their* dignity *in abatement*. We do not mean to deny considerable merit to the arrangement we are now examining, and we avail ourselves of this very circumstance, to express our opinion upon this point, because it cannot be construed into a censure of the particular work we are reviewing.

Tojours Gai: a favourite Rondo for the Piano Forte or Harp. By J. Dale. Price 1s. 6d.

We think this calculated to excite the *tojours gai* in a ball-room; and we are of opinion, that the subject of it would form a very *cheerful* dance.

Marianna: an Air, with Variations, for the German Flute and Piano Forte. Composed by A. Howship. Price 3s.

This is a very favourable specimen of Mr. Howship's abilities. Of the variations, we give the preference to the 1st and 4th: the idea of the 5th is similar to the 4th, but is performed on the flute. We should have preferred the last variation, or what Mr. H. calls the *coda*, if it had been written in the original time. It departs too much from the subject.

La Jeunesse; a new Divertimento, for the Piano Forte; in which is introduced the Air of "Youth's the season made for Joy." Composed by M. P. King. Price 2s. 6d.

The first movement in this divertimento is somewhat similar in style to a polacca. If the word *new* be intended to mean *original*, we should question the accuracy of the interpretation. The arrangement of the air of "Youth's the season," is light and pleasing, but contains nothing striking.

Who would ever Courts pursue? a Canzonet, with an Accompaniment for the Piano Forte or Harp composed by R. Staes. Price 1s.

The melody of this song resembles an Italian air that was adapted by *Storace* to the words "Are ye fair as opening roses." In the accompaniment of the first bar of *the song*, we should prefer a D instead of an F, or the F in the treble changed to D; as at present *the effect* of consecutive octaves is produced. The great merit of this song consists in its simplicity, and the absence of all affectation.

The Pride of the Valley: a song, composed by M. Holst. Price 1*s.* 6*d.*

The melody of this song is smooth and flowing. We should have preferred an A to an F in the vocal part, bar 19, page 2, as it would then remove the consecutive octave with the bass, and be more expressive. If Mr. Holst intended this as an *unison passage*, he should have had unisons in the accompaniment. After the words "*far away*," bar 22, there appears a *something* deficient, *vide* passage marked A, plate 1. We think it would have been better as we have given it, in plate 1, marked B. Upon the whole, this is a pretty song.

No. I. of the Vocal Works of Handel, with a separate Accompaniment; arranged for the Organ or Piano Forte, by Dr. John Clarke, of Cambridge. Price to Subscribers 5*s. to Non-Subscribers,* 6*s.* 6*d.*

The admirers of the immortal Handel, are under no slight obligation to Messrs. Button and Whitaker, for the spirit which has induced them to undertake the hazardous speculation of publishing the whole of the vocal works of Handel, arranged for the organ and piano forte. A work of a somewhat similar nature has been published by Mr. Corfe, of Salisbury, under the title of "The Beauties of Handel," which includes most of the favourite Songs in the several Oratorios, &c. with a separate accompaniment for the piano forte.

The observation of Dr. Johnson, respecting the "Beauties of Shakespear," is applicable to the "Beauties of Handel," to publish which, it would be necessary to publish the *whole* of his works; but we should be guilty of injustice to the publication of Mr. Corfe, if we were to deny it the praise of being excellent, so far as it professes to extend. It does not, however, preclude the propriety, or even the necessity, of a work similar to that now under consideration; for although the edition of Handel's works, in score, by Dr. Arnold, might seem to render this work unnecessary, yet those who are acquainted with the inaccuracies of Dr. Arnold's edition, and the difficulty of playing from score, will not consider that publication as at all superseding this. To obviate the difficulty of playing from score, Dr. Clarke has compressed the principal features of the accompaniments into a separate part for the piano forte. This is no trifling advantage, and the skilful manner in which he has executed it entitles him to no slight measure of praise. The first number consists of part of the Oratorio of Acis and Galatea, and is certainly printed in a style of superior elegance, and what is still better, is entirely free from inaccuracies. The alto and tenor recitatives and airs are printed in the treble cliff, as are also the soprano, alto, and tenor parts in the chorusses. The reason assigned for this is, the *accommodation of the ladies.* To the soprano parts being transposed into the treble cliff we have no objection, but we must candidly acknowledge, that to transpose the alto and tenor parts appears to us something like innovation, without improvement, because there are but few ladies who have sufficient compass of voice to sing these parts as they are now written; and if they could, it would have a bad effect, as the parts would, in that case, be *inverted,* and we should have the alto and tenor *squalling* above the treble.—In some places (*vide* bar 1, page 14,) it would produce consecutive octaves, where Handel, in the original, only intended unisons. In other parts, wherever in the original there is a succession of fourths, in the present arrangement there will be a succession of fifths.

Again, how can Dr. Clarke pretend that such passages, in the second line, as bars 2 and 3, page 6; bars 5 and 6, page 8; bars 1, 4, and 5, page 9; bars 1 and 4, page 14, are thus transposed for the *accommodation of ladies?* Where will he find ladies capable of performing these passages?

It may have been right in Dr. Clarke to make the arrangement he has done, but certainly a *wrong* reason is given for his doing it. It may render the alto and tenor lines less difficult to gentlemen who are unacquainted with the C cliff; but we acknowledge it would have been more satisfactory to us if the C cliff had been pre-

served. At any rate, some kind of information should have been given (a note at the bottom of the page would have been sufficient) relative to the particular kind of voice for which the airs were originally written. At present, one can only judge from *the compass*—a very uncertain criterion.

Upon the whole, however, we are pleased at any endeavour to introduce Handel to a more familiar acquaintance with the ladies, and with the public. When a relish for his admirable compositions shall once prevail, it will be to the exclusion of a great deal of ephemeral trash, which contributes to vitiate the public taste, without honour to the composer. There is something very chaste and classical in the embellishments, particularly in the frontispiece, which is ornamented with an engraving of Roubilliac's celebrated statue of Handel, in the gardens at Vauxhall, the likeness of which is well preserved.

If the succeeding numbers correspond in accuracy and elegance with this, we sincerely wish the projectors every success.

A selection of Irish Melodies, with Symphonies and Accompaniments, by Sir J. Stevenson; and characteristic Words, by Thomas Moore, Esq. Nos. I. and II. Price 15*s. each.*

The first number consists of four airs, arranged for two performers on the piano forte, and twelve songs, four of which are harmonized. We are very much obliged to Sir J. Stevenson for the trouble he has taken to make us better acquainted with the Irish melodies, and for the *pleasing form in which he has presented them* to our notice. The Symphonies which he has added are at once elegant and expressive. Of the airs, we most admire "When he who adores thee," which is remarkable for its simplicity and pathos; and "The War Song," which is particularly bold, and possesses much of the wildness characteristic of the Irish music. Of those airs which are harmonized, we prefer "The Harp that once 'thro' Tara's Halls." This melody is well known to the public by the name of "Grammachré Molly." It is harmonized in the most masterly style. The song, entitled "The Meeting of the Waters," although very beautiful, too closely resembles the song of "Kate of Killarney."

The second number of this interesting work consists of twelve Airs; six of which are harmonized. Of these, we prefer "St. Senanus and the Lady." (This ballad is accompanied with a sort of illustrative descriptive plate.) The symphony which Sir J. Stevenson has prefixed is extremely tasteful, particularly the three last bars. The manner in which the E and D in the 2nd and 4th bars, are used, reminds us of Jomelli's Introduction to his *Requiem*. The distinction which Sir J. Stevenson has made between that part of the song which consists of dialogue, and the last verse, which is merely narrative, is highly judicious; we are, however, surprised that he has made no difference in the accompaniments. This seems to be a particular feature, we had almost said defect, in Sir J. Stevenson's compositions. We dislike the arrangement of the parts where the three voices ascend together, from the last note of the first bar of the trio, to the first note of the following bar. The treble notes form fifths with the bass, notwithstanding that the fifths are imperfect. We suspect that in the passage 10th bar, page 54, there must be some error of the press, as at present there are two consecutive fifths in the two treble parts. The F in the lower treble should have been an E.

In the song "How oft has the Benshee cried," the E in the 18th bar, page 67, should be marked flat. It is remarkable, that Sir J. Stevenson has written the last symphony of this song in the minor mode, although the air itself be in the major. We do not think that the words justify it. The air "We may roam through the World," has long been familiar to the public, as a country dance; and the song, "Eveleen's Bower," which is here directed to be played as a plaintive air, has been long known as the cheerful song of "Come down stairs, pretty Peggy O!" The song "Silent, oh! Moyle," is plaintive and beautiful in the highest degree.

This number concludes with the exquisite

Air of "My Lodging is on the cold Ground," which is arranged both as a song and a duett; but it is done without disturbing the simplicity of the original air.

We are given to understand that the demand for this Work has made a new impression necessary. We are pleased to hear this, as it will afford the publishers an opportunity of correcting the following errors:

No. 1.

Page 12 6th bar, symphony, in the bass, 1st G should be omitted.
13 Ditto ditto
14 2nd bar, 11th line, accompaniment, A should be added to the quavers.
23 1st bar, symphony, bass, $\frac{C}{E}$ must be dotted, and $\frac{B}{E}$ quavers.
— 1st bar, accompaniment, 6th line, should be E instead of F.
24 1st bar, symphony, bass, $\frac{C}{E}$ must be dotted, and $\frac{B}{E}$ quavers.
— 1st bar, bass voice, line 8, the D should be flat.
— 2nd bar, tenor voice, line 13, should be quaver rest, and D quaver instead of E crotchet.
26 Ditto, ditto, line 3, ditto.
29 3d bar, accompaniment, the G should be sharp.
30 5th bar, 14th line, the B should be A.
34 5th and 6th bars, accompaniment, should be the chord of $\frac{F}{C}$ instead of $\frac{F}{E}$ flat.
36 1st bar, line 14, first D should be C.
— 2nd bar, ditto, the apogiatura notes should be $\frac{D}{A}$ instead of $\frac{F}{C}$ and B minim should be out.
38 4th bar, line 11, ditto, ditto.
41 7th bar, bass, the two D's should be E's.
— 8th bar, bass, E minum, and D crotchet above, should be added.
— 10th bar, beginning of the bars should be dotted.
— 14th bar, the two E's should be middle C's in accompaniment.
— 25th bar, the $\frac{G}{E}$ accompaniment should be $\frac{E}{C}$ and the C should be G below.
— 27th bar, there should be $\frac{G}{D}$ in accompaniment, and B second line in the bass, instead of rests.
— 33d bar, should be the same as bar 25.
— 37th bar, the G in the treble should be tied to the $\frac{C}{A}$ in bass, and the E taken out
42 4th bar, in accompaniment, should be the same as bar 14, page 41.
— 14th bar, ditto, ditto, 24, ditto.
— 15th bar, ditto, ditto, 25, ditto.
— 22nd bar, the first F in accompaniment should be D.
— 29th bar, in vocal part, should be a crotchet with "Sir," and crotchet rests in accompaniment, and the double bars out.
— 30th bar, the beginning of the bar should be dotted.
— 33d bar, accompaniment, the two E's should be C's; 37, rest out, and A with "Sir" put in with repeats.
— Bar 44 should be the same as bar 15.
43 Bar 6, ditto.
— 12th bar, in voice part, a bar rest and crotchet rests in accompaniment and bass.
— 13th bar, dotted.
— 16th bar, same as 4th, bar 42.
— 27th bar, same as bar 15, No. 42.
— 35th bar, ditto.
45 2nd bar, second voice, E first line, added to G and to B, quavers, and F crotchet, not A.
— 10th bar, ditto.

Page 45 13th bar, accompaniment, the C should be natural.
46 11th bar, E in bass, out.
47 1st bar, crotchet rest over the F in bass.
— 11th bar, E in bass, out.
51 15th bar, last D should be C.
— 20th bar, G's natural, in bass, should be A' .

Vocal Harmony, &c. Vol. I. and II.

The 1st vol. consists principally of Glees for three voices. The old glees are as follow:—On softest Beds—Melting Airs—Non nobis, Domine—Peace to the Souls of the Heroes—Where'er you tread—Which is the properest Day to drink—Flora gave me sweetest Flowers—When gay Bacchus—Fill the Bowl—A generous Friendship—Glorious Apollo—Life's a Bumper—Ah! cruel Fate—Come, Shepherds—Fear no more.

These are all so well known, that it would be idle to expatiate on their particular merits. There are six new glees. The first we meet with is "Oh, share my Cottage," by Dr. Callcott, for three voices. This certainly does not appear to advantage, in a collection which includes his celebrated Glee of "Peace to the Souls." In this latter Glee, we are surprised that an error, which must have annoyed the ears of so many excellent singers as have performed it, should not have been corrected long since: we mean where the voices join, at the words "O Morna," page 22. There are two octaves in the extreme parts, and a naked fifth in the middle part. This defect may be remedied by altering the fifth to a third; that is to say, by taking F instead of A, the first time the words occur; and B instead of D, on the repetition.

The second new Glee, "Serene and mild," is for four voices, composed by Mr. Webbe, who may be called the FATHER of this style of composition. The principal merit of the first movement consists in the skilful manner in which the parts are put together. The passage at the words "A thousand Charms," is common-place. The last movement in 3-4, marked *con terrore*, is much superior to the first. The staccato notes, at the conclusion, are striking and appropriate.

The third Glee, "It is the Nightingale," is for three voices, composed by Mr. M. P. King. The words of this glee are taken from "Romeo and Juliet." That they are exquisitely poetical and beautiful, we need not tell any reader of taste: how great, then, must have been our disappointment at the manner in which they are set! If it be the object of music to carry the words more forcibly to the mind of the auditors, Mr. King has either mistaken the words, or has very inadequately conveyed their beauties to our dull imaginations. We have given, in the plate I, marked D, the passage to which he has adapted the words "And jocund Day stands tip-toe on the misty mountain's top." The passage is common-place; but this is not our only objection: the emphasis is laid so as to express the word jocund thus:—"Jo-o-o-cund Day;" so that, by the sforzando mark, the emphasis is curiously thrown upon the second O. This has a very ludicrous effect, and totally alters the character of the words. The counterpoint of this Glee is likewise defective. In the three last bars, page 31, there are a seventh and a fourth left unresolved. In the last bar but one, page 33, the two trebles descend from C and A to B and G; at the same time that the bass descends from B to A. This last defect may be easily remedied, by omitting the A in the bass, and making the following B flat a quaver.

In bar 10, page 44, there is another seventh unresolved; and another in bar 12.

If Mr. King does not feel his genius kindle with fire and enthusiasm when he attempts to add to the harmony of Shakespear's words, he had better take a humbler flight among the "choughs and crows."

The three-part glee, "*Thou Pride of the Forest*," composed by Dr. Callcott, is in the same style as his *Earl King*, the *Elf*'

King, &c. of which we consider Dr. Callcott the inventor.—We should be inclined to designate it the *narrative* style. It is peculiarly adapted for Tales, which it accompanies without interrupting. It does not call off the attention from the story by any abstruse science, or forced composition. —There is one passage, however, (the last line, page 80,) which reminds us rather too strongly of Purcell's *Ground*. It is, upon the whole, a pleasing glee, written in an easy, flowing vein, and possesses so many marks of Dr. Callcott's peculiar manner, that we should have recognized it as one of his productions, if we had met with it in any collection. The only new glee that remains to be noticed, is one for five voices, composed by Mr. Attwood, entitled, "To all that breathe." Although it be rather long, it is the best new glee in the collection. The words, "The panting Hare," are uncommonly well expressed. The arrangement of the parts at the second line, page 64, somewhat resembles a passage in Linley's beautiful Madrigal, "Let me, careless." The syncopated notes in the bass, page 72, are judiciously introduced, and add much to the effect. The last movement, marked andante, is uncommonly beautiful. It is simple, elegant, expressive in its melody, and, in its harmony, scientific. Upon the whole, we think this volume inferior to the third, which we noticed out of its turn in our last Number; but we are pleased to say of a work, published in Numbers, that it improves as it proceeds.—The second volume of this work contains the following old glees: "Make haste to meet."—"To all Lovers of Harmony."—"Hail ever pleasing Solitude."—"Come, bind my Hair."—"How sleep the brave!"—"Discord, dire Sister."—"Jolly Bacchus."—"In the merry Month of May."—"Where weeping Yews." —The greater part of these are likewise too well known to require any comment; we shall therefore notice the new glees, of which this volume contains six.—The first, "Sweet Poet of the Woods," for four voices, by Mr. Horsley, does not contain any thing very striking or remarkable. The last movement, however, is good. The second glee, "Who rides on that Meteor," is for three voices, and is composed by Mr. King.—We are happy to observe the superiority of this composition over the glee by the same writer, in the first volume, which we were under the disagreeable necessity of censuring. The melody of this glee contains several sweet passages; and more attention has evidently been paid to the counterpoint, with the exception of a few naked fifths, second bar, p. 135; fourth bar from the last, p. 136, &c.

The new glee, "Soft and Safe," by Dr. Callcott, is for six voices, and is the best he has written for this work. There are but few common-place passages, (except, for example, the beginning of page 138, the last half-bar, page 140, and two first bars of page 141.) The union of all the voices, at page 142, after the two trebles and counter-tenor have been for some time left to themselves, has an uncommon rich and harmonious effect. The parts are put together in a very masterly style. The climax at the end is excellent, and the whole is highly deserving of our praise.

"Come away, Death," for four voices, is the production of Mr. S. Webbe, junior, In writing it, he seems to have had in view the style of the old serious Madrigals.—Although not conspicuous for beauty of melody, it is, with respect to counterpoint, unexceptionable, and, upon the whole, is a very favourable specimen of his talents.

We give Mr. Horsley credit for selecting the beautiful words of Cowley, "Awake, awake, my Lyre," for the subject of the succeeding glee, which is for five voices. He has conceived them with great judgement, and has expressed them with much ingenuity. —The introduction of the key of D with the major third, at page 176, gives uncommon spirit and energy to the words, and discovers the hand of a master.—The transition to the minor, at the words "Sleep again, my Lyre," is highly appropriate and expressive.—The whole of the last movement in common time is excellent. We observe a departure from the usual routine of composition, in this glee commencing in F, and ending in the relative minor; but we are

far from considering this as a defect: on the contrary, it seems to have been one of those cases in which a composer may be allowed to "snatch a grace *beyond* the reach of art."

The last new glee is for three voices, "Let us cheerful Souls"—a composition by Mr. Webbe. It is of a cheerful, convivial nature; but we must acknowledge our fears that the mine to which we have been indebted for so many of the treasures of harmony, is nearly exhausted. We cannot admire such points as occur in the second line of page 103, and the one beginning in the treble of bar 9, page 185, even from the pen of Mr. Webbe.

Thine am I, my faithful Fair; a Canzonet, written by the Author of "The Thorn;" composed, with an Accompaniment for the piano forte, and inscribed to his friend John Davy, by John Whittaker. 1*s.* 6*d.*

We have some recollection of having seen this beautiful canzonet (or rather *song*) previous to the time prescribed for the commencement of our labours; but the composition having been recently sent to us by Messrs. Button and Whittaker, we suppose ourselves to have been mistaken; at any rate, we do not regret being called upon to notice a composition which we can recommend with so much satisfaction to ourselves, and, we doubt not, with equal pleasure to our readers.

The melody is extremely elegant and expressive; and we particularly admire the contrary motion between the vocal part and the bass, at the commencement. The temporary modulation to the 2nd of the key, at the beginning of the second strain, is plaintive and highly appropriate. The words "There to throb and languish," are admirably expressed. The suspension of the E in the vocal part, whilst the accompaniment continues flowing, bar 14, page 2, and the introduction of the G natural, is tasteful and elegant in the highest degree. It has also the advantage of being within the compass of most voices, and is altogether one of the most delightful songs we have met with. It is no slight indication of its merit, and may afford Mr. W. pleasure to be informed, that we heard the celebrated S. Wesley make this air the subject of one of his inimitable extemporaneous effusions, and that he treated it in such a way as to satisfy his enraptured auditors that he felt the beauty of his subject. Perhaps this circumstance may have contributed, in some degree, to establish its great merit in our opinion.

The Collier's Windlass; sung with applause by Mr. Taylor, at the Theatre Royal, Haymarket; written and composed by Mr. Emery. 1*s.* 6*d.*

The style of this composition is bold and theatrical, and not very unlike Mr. Dibdin's. The modulations in the second part are more scientific than we usually meet with in songs of this description. The whole of the composition would do credit to a professor. The E in the bass, bar 14, page 2, should have been marked flat.

We have on many occasions admired the versatility of talent which Mr. Emery possesses. He is certainly an excellent comedian; he is a very tolerable painter; and we could name a recent Mus. Doc. who is not more at home in music.

BOTANY.

THAT encouragement should stimulate exertion, is a truth of which the Proprietors of Le Beau Monde and Monthly Register are perfectly sensible; and in gratitude for that encouragement which they have so liberally experienced, and in compliance with the wishes of many respectable Subscribers they propose to add the science of Botany to the other attractions of this periodical work. This department will be under the direction, and in a great measure executed, by Doctor Thornton, so well known as a public Lecturer on Botany, and as the author of several Botanical Works, highly honourable to himself and the country. We need only to mention, as proofs of this assertion, his "Temple of Flora, or Poets', Painters', Philosophers', and Botanists' Botanical Garden; which contains picturesque coloured Plates of the choicest Flowers of Europe, Asia, Africa, and America;" his "New Illustration of the Sexual System of Carolus Von Linnæus;" his "Philosophy of Botany," and his "Alpha Botanica, or First Book which should be put into the Hands of the Student in Botany." We are unwilling to raise expectations that may be succeeded by disappointment, but we hazard little, in promising not only what will be gratifying to the general reader, but will be highly interesting to the scientific Botanist. To combine the *utile dulci* is the task which Doctor Thornton has undertaken to impose upon himself; and his labours will commence with an account of the progressive discoveries in Botany, hitherto a desideratum in English literature. From this account, it will be evident that this lovely science has not been destitute of philosophic observers, even in remote periods, when but little progress in that science is generally supposed to have been made. As an instance of Doctor Thornton's researches, we submit the foregoing specimen of a wood cut, published in the year 1540, almost two hundred and seventy years ago, when this method of engraving was in its infancy. Our Readers will observe, with pleasure, that in point of execution it has been rarely surpassed in modern times, and that the most minute parts of flowers were distinctly expressed in that remote period. But we do not propose to anticipate the learned Doctor in his remarks; it is our intention merely to announce to our Readers and the Public, that he will commence his Botanical Dissertations in our Monthly Register for January, and that they will afterwards be regularly continued.

POETRY.

LINES,

Written on visiting Westminster Abbey. Addressed to a Friend.

The blaze of noon is o'er; yet thro' the pile
The proud pane flings a mitigated ray;
Warm and all lovely glows the gothic aisle
With milder glories at the wane of day.

Here let me pause, and with obedience due
In silent awe the sanctuary tread,
Or there the monarch's mausoleum view,
'Midst pondrous columns, and the mass of shade.

Here the rapt Muse her Henry's form surveys,
Here her Plantagenet's, whose dust below
Own'd the rich circlet that was yet to blaze
With gath'ring glory on a Brunswick's brow.

Rest from your race of glory, sleep in peace,
Monarchs of other days! Thou hallowed shrine,
Let not oblivion's hand these relics seize,
The holier relics of the Briton line!

Rest, O ye monarchs of the western main,
That won the laurel, and that wore the plume!
Here rest, till God's own harbinger again
Shall rouse the sacred tenant of the tomb.

Yet what remains to mark a monarch's name,
But the faint features of the mimic bust—
The rough, cold records of sepulchral fame,
Earth giv'n to earth, and unto dust the dust?

Are these the trophies of the kings of men?
These the sole records of the souls of war?
The artist's chissel, or the poet's pen—
The frail memorial and the sculptur'd car?

No, let the historic Muse, in purer pride,
Inscribe their virtues on her hallow'd stone—
Those meek, mild virtues be their better guide,
And let them live from excellence alone.

O'er these shall never fall Oblivion's tear!
Fame, honours, wealth but transient glories give;
With added lustre shall our sires appear,
If in ourselves their fair example live.

Here sleep the brave, the gay—firm friends and foes—
Soft virgin charms, that merited the tear;
Here rest the sages—here the saints repose,
And with the monarch sleeps the martyr here.

Yet does the lover in the gloomy fane
Court the cold busto of the cloister'd shade,
Or woo, with anguish and complaining vain,
Th' ungenial bosom of the marble maid?

Say, does the martyr, that can bleed no more,
But in these brief and narrow confines lie?
Or is the saint's high-delegated pow'r
But crumbling dust and frail anatomy?

Saints, whose warm embers 'gainst Heav'n's chancery hurl'd,
Bow'd the meek head, and bent the suppliant knee,
Died like the Saviour of a sinful world,
And sunk in silent agony for thee.

That Power, whose hand preserves, with awful care,
The golden register inclos'd on high,
Alike beholds th' eternal record there,
If groan a Stephen, or a Stuart die.

God of my lengthen'd life! thou Being pure,
That know'st the traces of my secret soul,
Tho' pleasure's path, or passion's wiles allure,
Keen cares oppress me, and fierce ills control;

Thine be the glories for these sons of earth!
Thine, the pure tribute of accepted praise!
Thou elder Being of primeval birth—
The white-rob'd ancient of eternal days!

Thine, mighty Pow'r, the warm oblations rise!
To thee, tho' faint, these energies aspire,
That hail the generations good and wise,
And give to God and gratitude the lyre.

A. C. R.

To the Editor of Le Beau Monde.

SIR,

THE following fragment was many years ago translated from a German author, whose name I cannot now recollect; nor do I remember the title of the original poem, which I think I met with in a selection. I may venture to say, that even through my feeble version, it is manifest that the original must have possessed considerable beauties Should you favour my attempt by inserting it in your elegant pages, I may venture to hope that some of your readers may be able and willing to direct me to the author who has so much interested me, and on whom I should be glad to bestow more attention.

I am, Sir, your obedient servant,
THOMAS NOBLE.

Blackheath, Aug. 20, 1809.

From western clouds the purple borders fade:
O'er yon dark oaks the moon-beams slow advance:
Deep-moaning breezes, faint, the heath pervade;
Light o'er the willowy moor the fairies dance.

On yon steep headland, lo, the watch-tow'r fires
Glimmer, unsteady, thro' the shades of night:
Yon island, with its chalky cliff, retires,
Like a loose sea-mist floating from the sight.

This ruin'd abbey's awful turrets gleam
'Mid the dark shrubbery of the rocky bay:
Beneath, the billows break their restless stream,
And long and hollow dies each sound away.

'Mid yon high grove of sacred elms serene,
Beside yon mould'ring porch, with ivy twin'd,
In the still light is Melancholy seen,
Musing, and on a fallen tomb reclin'd.

Yon horrid yews a crumbling vault contain;
O'er yon fall'n portal nodding weeds aspire;
Owlets and bats long ceas'd it to restrain;
Now varied wings fly round the fretted choir.

Dark, shatter'd windows, here and there permit
Thro' the deep arch the dusky ray to pass:
The struggling light seems thro' the gloom to flit,
And faintly settles on the tinted glass.

Round the great altar rustling herbage plays
O'er steps worn hollow by the frequent pray'r
Which Piety with ardent sighs would raise,
And listening seraphs waft thro' hallow'd air.

Now lonely blasts along the wide aisles roar,
Where spiders each confessional surround:
There thro' the vaulted chancels rolls no more
The solemn organ's awful stream of sound.

The choir of hymns is silent—round the shrine
No more, in clouds, the festive incense waves;
No more, irradiate, beams the form divine;
Its worshippers all moulder in their graves.

Yet hence the glist'ning lamp oft sheds its rays
What time pale vestals thro' the midnight pour'd
Their low and languid minstrelsy of praise,
Sigh'd for the world, and tremblingly ador'd.

* * * * * * * * * * * *

To the Editor of Le Beau Monde.

SIR,

THE following Epitaph was put into the hands of the writer, by the son of the late ingenious electrician, the Rev. Abraham Bennett, F. R. S. Curate of Wirksworth, in Derbyshire, and curator of the choice Mineralogical Collection of the Duchess of Devonshire, at Chattesworth.

He was the inventor of the Electrical Doubler and Gold Leaf Electrometer, besides the ingenious devices of many experiments connected with electric science which are not sufficiently known. The Epitaph itself was written, and about to be put up three years ago, when the writer had an interview with the eldest son, now in the cotton manufacture at Wirksworth, but

equally attached to the studies of his father. By some accident, the date of his decease was omitted in the copy: it took place about six years ago. You shall have this, however, more particularly, in a future Number.

Your's,

PHILAMICOS.

HERE rest all that was mortal
of the
Rev. ABRAHAM BENNETT, F. R. S.
and Curate of this Parish;
who, after being
insulated
on this jarring scene of life 49 years,
escaped his recupient,
and was added to the
illustrious train of the Disciples of
PROMETHEUS;
whose torch divine he had, as a
Second *Franklin*,
Wielded with a hand so masterly.
Whilst we feast upon the lovely simplicity of
unadorned Truth,
than his
WORKS
He need no other Monument.

ODE TO HARMONY.

"Nymph of the melting voice, and beaming eye!
Hail, Harmony!

Nymph, we woo thee from the steeps
That bend o'er Tyber's classic wave,
Where Rome's dejected Genius weeps
In anguish o'er her Brutus' grave.

We woo thee from the vine-wove bowers,
That breathe and bloom o'er Arno's vale,
Where, sunk, at eve, on closing flowers,
Thou lists the Tuscan shepherd's tale:

Or near some rich cathedral pile
Hearest the anthem-chorus roll,
Soft-swelling through the darken'd aisle,
The requiem of the parting soul:

Or from some antique minstrel's tomb,
Thy harp, with many a wild rose twin'd,
Sighing through the vesper gloom,
Pours the slow dirge along the wind.

Nymph, we woo thee from a soil
Sunk in slavery and shame;
Nymph, we hail thee to an isle,
Dear to science, dear to fame!

Though Britain boast no Handel's strains,
No Titian's tints, no breathing stone,
Yet Freedom loves her emerald plains,
And Beauty calls the land her own.

There, there alone, Man's hallow'd form
In native grandeur towers sublime,
Bold, dark, and lonely as the storm
That, thund'ring, sweeps his northern clime.

A mingled wonder—mild and brave—
Stern as the midnight ocean's roar,
Yet softer than the murm'ring wave
That dies along its mossy shore.

And Woman—loveliest Woman! there,
From roseate lip and diamond eye,
Like the sweet eve-star chaste and clear,
Beams love and peace and purity.

Genius of Song! our Spirit woos
The potent magic of thy charms,
And bids thee twine around our brows
The wreath of arts as well as arms.

Queen of the soul-subduing art!
A generous people claim thy smile,
Give thee the homage of the heart,
And hail thee to the Western Isle.

***

SUMMARY OF POLITICS.

MANY circumstances united to prevent our last Review of Public Affairs from being as full and circumstantial as usual; and we stated our intention of making good this deficiency in our succeeding Numbers. We proceed to fulfil our engagement, not indeed with the pleasure we should have felt, if splendid victories, noble achievements, or successful enterprize, waited our recording hands. Those who are most interested in the fate of this country will most deplore the events which have occurred since the early part of last month; but the historian of the day must register what has happened, and has no choice but in the selection of the materials which are to occupy his pen. Of our domestic concerns, the most important, and certainly that which most interested the public, was the dispute between Lord Castlereagh and Mr. Canning, which terminated in the secession of those gentlemen from the cabinet, and ultimately produced a duel between them, in which the latter was severely wounded. There is something scandalous in the first view of this transaction, and it is necessary that we should enquire into the circumstances which led to it, before we can endure, with common patience, the degrading spectacle of two Cabinet Ministers, in defiance of law and decency, quarrelling and fighting about matters which relate to their situation as servants of the Crown. But if the conduct of either party has been such as to make the acquiescence of the other appear to be a dereliction of all honour and personal character, wise men may despise, good men may deplore, but the bulk of mankind will admit the painful necessity, if not the propriety, of such an appeal as Lord Castlereagh felt himself bound to make.

From the correspondence which has been published, it appears that Mr. Canning, "so long ago as last Easter, represented to the Duke of Portland the insufficiency (in his opinion) of the government, as then constituted, to carry on the affairs of the country, under all the difficulties of the times; and requested, that unless some change was effected in it, he might be permitted to resign his office." Lord C. was the Minister against whom these observations were directed.

It cannot surely escape the attention of the most incurious observer, that the charge of "insufficiency" was perhaps the very last charge that could, with any reasonable ground, have been brought against his Lordship by any member of a cabinet, of which the Duke of Portland was the head, and Lords Camden, Chatham, Harrowby, and Liverpool the members. If the ostensible motive, therefore, be not the true one, it must be obvious that what Mr. Canning concealed, was such as he considered to be unfit to meet the public eye. If Mr. C. had been silent, we might, with some degree of plausibility, have fancied this dislike to Lord Castlereagh to have proceeded from the conduct of his Lordship in the transaction which related to the East India patronage; but Mr. C. has released us from all suspicion of that kind; indeed he has made the subject to which we allude a sort of justification of the very insult of which Lord C. complains, viz. the postponment of his Lordship's dismissal, and the concealment of their determination; Mr. Canning stating, that "from a consideration of the particular circumstances under which his Lordship stood in the House of Commons, it would have given to his removal, at that period, a character which it was certainly no part of Mr. Canning's wish it should bear."

The motive, then, which induced Mr. Canning to act in this manner, must be traced to some other source, and we apprehend there is but one opinion upon the subject throughout the nation.—Ambition, the vice of great minds, seems to have infected Mr. C. and his whole conduct seems to have originated in a desire to strengthen his own particular interest in the cabinet, by the re-

moval of Lord C. and the introduction of his friend the Marquis of Wellesley, in his room. It will be in the recollection of our readers, how long the noble Marquis was detained in London after his appointment to Spain, at the period when this intrigue was carrying on. It will be recollected, too, that this memorable delay was fatal to our army in Spain, in which country the presence of an ambassador from England was indispensably necessary at this time, if it had only been to keep the Junta true to their engagements of supplying their British allies with the means of subsistence. This view of the subject will excite the most indignant feelings, and certainly demands the most rigorous inquiry; and we trust, that at the ensuing meeting of Parliament it will occupy the particular attention of that body.

This rupture, and the death of his Grace the Duke of Portland, which happened soon after, rendered it necessary to form a new administration. Application was made to the heads of the late ministry, Lords Grenville and Grey, for the purpose (as expressed by Mr. Perceval, in his letters to those noblemen) of forming, with their assistance, "a combined and extended administration." This application was unsuccessful in both instances; for although it happened that Lords Grenville and Grey were at such a distance from each other as to preclude the possibility of communication, yet they both declined Mr. P.'s proposal. Lord Grenville, indeed, came to town immediately, considering himself bound to attend his Majesty's commands; but when upon his arrival he discovered that he was to confer, upon the proposed administration, with Mr. P. and not with his Majesty, he declined seeing that gentleman; avowing, in his letter, that "although his objections are not personal, they apply to the principle of the government itself, and to the circumstances which attended its appointment." Lord Grey declined even coming to London upon the business. However the conduct of these noble Lords may be considered by their friends and adherents as honorable and politic, we have no hesitation in declaring our opinion to be hostile to the very principle upon which it is grounded. If it be once admitted that a powerful aristocracy may draw a line of circumvallation round the throne, and dictate the parties who shall be employed, from the first minister to the lowest subaltern, the throne will become a cypher, and will cease to be either an efficient or independent branch of the constitution. As to my Lord Grenville, we cannot look at the consequence which now attaches to that family, without recollecting the source of that greatness, which is now bold enough to kick at the ladder which has reared its "*young ambition*," as

"—— honeysuckles, ripen'd by the sun,
Forbid the sun to enter——
Like favorites made proud by princes' smiles,
That raise their hands against the power that bred them."

We cannot help wishing, "that pomp might take physic," and endeavour to make the nation some return, for the enormous pensions and sinecures which that family receives annually—by active service, and efficient duty. Considering the decided conduct of his Majesty, and the still more decided opinion of the public "on the circumstances which attended its appointment," we cannot but consider this hint in his Lordship's letter as an insult to both, and as an unequivocal proof that the emancipation of the Catholics is a *sine qua non* of his Lordship's coming into administration. This unsuccessful application, however, had the effect of delaying, for nearly two months, the forming a new ministry. Mr. Perceval at length accepted the arduous situation of prime minister; and a cabinet, including all the former members of administration, has at length been formed, not, indeed, without some refusals on the part of many persons to whom different situations have been offered. It is now certain that the accession of the Marquis Wellesley to the new administration has been solicited, and the arrival of his Lordship, which is daily expected, will soon determine the point. For the present, his Lordship has returned an equivocal answer, and like a good general, wishes to reconnoitre the ground upon which he is to en-

gage, before he makes preparation for a campaign. But on taking a view of his Lordship's political life, we are not very confident as to the services of his Lordship. We cannot forget his conduct in India, his lavish expenditure, his revolting state and dignity, and above all, his despotic tyranny over the press. If his Lordship should introduce such principles into the British cabinet, we tremble for the liberties of the country.

Among the subjects of minor importance which have called the public attention during this month, those which relate to Colonel Wardle, and the proceedings which have arisen out of the Theatrical Riots, are the principal. On the 3rd of November, a motion was made in the Common Council of London, by Mr. Kemble, that the resolution contained in the amendment made by Mr. Goodbehere, and carried at a former meeting, should be rescinded.—He supported his motion upon the ground that the motion which had been given notice of by one gentleman, (Mr. Dixon,) and afterwards abandoned, was brought forward by another, (Mr. Goodbehere,) merely for the purpose of introducing the resolution of which he complained. That it was contrary to the honour and dignity of the Court, that resolutions should thus be obtained by a surprize of this nature. The resolution, or rather the amendment, which had been introduced, had little or no relation to the notice upon which that Court had met. He declared that he had no wish to touch the vote in favour of Mr. Wardle, he merely objected to the propriety of introducing an amendment, condemning Lord Castlereagh and Mr. Perceval, on a question for rescinding a vote of thanks in favour of Mr. Wardle. This motion was seconded by Mr. Deputy Box, upon similar grounds. Mr. Goodbehere defended the resolution which he had originally moved. He maintained that it was consonant to the practice of Parliament, the India House, and of every public body, to take such a view of the questions submitted to them as should appear right to the members present, and not to determine it, if they thought proper, either in the negative or affirmative. That the object of the present motion, however disclaimed, was to tarnish the lustre which the former decision of that Court had thrown upon the conduct of Colonel Wardle. That Colonel Wardle was a man of mild, amiable, and domestic manners and habits; that his excursion to the sea-coast with Mrs. Clarke was perfectly harmless, and necessary to amuse a slippery woman; that although he had abandoned his prosecution for perjury, he had obtained a true Bill at the Sessions against her and her accomplices, for a conspiracy; and, in short, that the Court and the country at large were so much indebted to his exertions in the last Session of Parliament, that they were bound to vindicate his character.

He was followed by Mr. Jacks, in a speech of considerable ingenuity, condemning the conduct of both parties. He disliked the original resolutions, but did not think that any thing had occurred since, to alter the public opinion as to Col. Wardle's conduct. He did not defend the transactions which were imputed to Lord Castlereagh and Mr. Perceval, but strongly contended for more liberality in determining upon the conduct of public men, which it was become fashionable to decry. He ridiculed the Colonel's financial statements and plans of reform; and concluded by saying, that he thought the prerogatives of the Crown in more danger than the privileges of the people. He had lived for nearly half a century well and happily under the British constitution, he had grown rich under it, and he wished it a long continuance.

Mr. Waithman said, that with respect to the original resolutions, he should be as ready as any man to rescind them, if any new discoveries had been made which militated against them. He thought, however, that from the indirect attack which had been made upon Colonel Wardle's *character, the Court were bound to defend it!!* He dwelt a considerable time upon the abuses which he contended were obvious in every department; and that ministers, and even that Court, required good looking after. He thought Colonel Wardle had been used most ungratefully; and that if he had rendered

the country services at all equal to those of Colonel Wardle, and had then had his conduct and house searched for private anecdotes to vilify his character, he would have thrown their gold box into their faces, sooner than have received it. He opposed the present motion, because he thought the adoption of it would be a censure on Col. Wardle.

Mr. Dixon supported the motion of Mr. Kemble, and declared he should not have brought it forward, if he had thought it would hurt Colonel Wardle.

The previous question was then carried by a great majority.

A motion was likewise made on the 9th of November in the Court of King's Bench, by Mr. Serjeant Best, in the case of Wright *versus* Wardle, to shew cause why the verdict for the plaintiff in this case should not be set aside, and a new trial granted; but from the facts disclosed by the learned counsellor, we do not expect he will ultimately succeed in the application. It was not pretended that the verdict was contrary to evidence, that there was any mis-direction on the part of the Judge, or that any material facts or witnesses have been obtained, that could not have been brought forward at the former trial, or which may not be satisfactorily explained by affidavits in reply, when the rule comes on to be argued. We cannot but recollect the intemperate appeal which this gentleman made to the people of the United Kingdom, in the first moment of irritation, upon the verdict being given in favour of Mr. Wright, and the broad, unqualified charge of perjury which he pledged himself to substantiate; and combining this recollection with a knowledge that he has not even attempted to bring it forward, we are inclined to view the proceedings which have since been resorted to as the convulsive struggles of expiring popularity. We know, too, that Mr. Wardle has commenced actions at law against the printers and publishers who had the sense and spirit to expose the futility of his conduct, and to examine the motives of it. The patriotism which cannot bear the test of investigation, and the patriot who endeavours to stifle it, are alike contemptible.

The final arrangement of a definitive treaty of peace between Austria and France, is certainly the most important transaction of the preceding month. During the continuance of the protracted negotiation, which has at length terminated in this event, we have no doubt the interests, if not the division, of other empires, occupied the mind of he wily Emperor, otherwise we cannot satisfactorily account for the long interval between the signing of the armistice, and the conclusion of the definitive treaty.

From the very terms of this peace, it is obvious that Buonaparte has been disappointed: he had no intention of concluding a peace with the *Emperor of Austria.* Hungary had been assigned to another sovereign, and the clipped wings of the Austrian Eagle were to be left in a condition to soar above the federated states of the Rhine no longer. But whatever may have been the real state of the battles of Aspern and of Wagram, respecting which so much has been said and written, it appears certain that Buonaparte has a better opinion of the prowess of Austria than he had previous to the late campaign. Victory has been purchased with great loss, and has been won by more arduous exertions than upon former occasions, and the military tactics of Austria have been evidently improved. We can account, therefore, in some measure, for the terms being more favourable than the friends of Austria had apprehended, or than its enemies had vainly anticipated. If report be true, that Buonaparte begins to entertain some jealousy of Russia, it may be considered as a stroke of policy in him not to annihilate Austria as a power, capable of keeping Russia in check; but this consideration is lost in the recollection that if he had been able to destroy that power, he would have been able to parcel out the dominions belonging it, to more submissive and obedient vassals than he is likely to find in the House of Lorraine.

In tracing these events, we cannot but feel all our sympathies awakened in favour of the brave Tyrolese, whose unshaken loyalty and determined valour merited a better fate. We fear, that whatever may be the disposition of our government, it will not be in its

power to render them any effectual assistance: we may, it is true, by pecuniary aid, and by furnishing them with the means of procuring arms and ammunition, enable them to continue a desultory war amid their mountains, and to be very troublesome to their new proprietor; but humanity would interpose to prevent this ineffectual struggle, if policy did not completely interdict it. A more favourable opportunity must be waited for, and the brave Tyroleans must unquestionably submit, for the present, to a fate which neither loyalty, a spirit of freedom and independence, or the most invincible courage can avert or controul.

The importance which Buonaparte attaches to the extirpation of those principles which have occasioned the insurrection of the Tyrolese, is evident from the efforts which he is making to subdue them. The most formidable armies are pressing upon that ill-fated country from every direction; and the description of warfare likely to be carried on in the Tyrol, will, in modern times at least, find its prototype only in the sanguinary, devastating scene that marked the revolutionary crusade of the French republicans against Switzerland.

We have already expressed our opinion as to the unfortunate termination of the Spanish campaign: we do not think that any blame attaches to the British Ministry, nor to the British Generals; but we cannot too deeply lament the intrigues which prevented the Marquis Wellesley from proceeding, earlier in the spring, to his destination. If this had been done, we should not, in all probability, have had to deplore the loss of so many brave men, the privations which the survivors experienced, and the present danger to which they are exposed, from the undivided forces of the Emperor of the French. But if the opinion of Sir John Moore, corroborated by the fatal loss of two armies, is to produce any effect upon our future councils, we trust it will induce the new administration to recal our troops from the peninsula, and confine the assistance we may chuse to afford this oppressed people to supplies of money and arms. We doubt if they are capable of receiving or enjoying, all at once, a state of liberty; they do not appear to feel, except in a few partial instances, that love of freedom and independence which must originate in a previous freedom of thought and action; and we again and again repeat, that a nation cannot be saved that is pre-disposed to be conquered. We can do the most complete justice to the bravery and perseverance of the Spaniards at Gerona, Saragossa, and other places, without compromising the opinions here expressed: they are exceptions to the general rule, and only shew what a nation of eleven millions might effect, if they were duly prepared and enlightened, to brave the horrors of a contest which, under such circumstances, would cease to be unequal, and of the event of which we should then cease to despair.

Ministers seem disposed to relinquish the last vestige of the unfortunate expedition, and to recall our troops from the Island of Walcheren. This determination is said to have been accelerated by the remonstrances of the present Commander on that island. No less than 8000 men are said to have perished; and although the number that daily expire are necessarily less than at the commencement of the epidemic, yet we do not find that any considerable abatement has taken place in the malignity of the complaint. As we have not succeeded in destroying the fleet, the possession of this island is certainly a most desirable object, as it unquestionably renders useless the large proportion of maritime force in the neighbourhood of Antwerp, and blocks up the navigation of the Scheldt. But can we afford that vast expence of blood that it requires? Does not humanity shudder at the idea of sending our brave soldiers to an almost certain death? Is the object so material to our safety, or so necessary to the destruction of Buonaparte's views, as to make it proper? We think not. And if the determination has actually been taken in our cabinet, the sooner it is carried into execution, the better. It is not by predatory excursions, by the maintenance of petty ports for the convenience of contraband trade, that the remnant of Europe is to be saved. It is by the exercise of wisdom and justice at home—those noble and important resources

of a great nation. There was a period, and that not very distant, when the balance of political power was considered of no small importance, and when our statesmen affected to talk with great precision of every trifling deviation from this counterpoise. It is humiliating to the philosopher and the moralist to trace the versatility of opinion which now prevails among modern politicians upon this subject. It is not long since a rivulet, a bog, or an inconsiderable fort placed in the south-east corner of Europe, would have set two rival nations together by the ears, lest the possession of it should give an undue preponderance to one party, and thereby disturb this boasted equilibrium. But now the most powerful government in the world is permitted to parcel out the territories of a once powerful nation, whilst the other neighbouring powers lacquey at the banquet which is prepared on the occasion, in hopes of having some of the offals thrown to thme by the great manufacturer of Kings!

A precise history of the events which led to the revolution in Sweden will, at no distant period, be a work of great curiosity and information. The rights of the people, which were trampled upon by the father of the late Monarch; the conduct of his Majesty from the moment he joined the deliverers of Europe; and all the other circumstances which terminated in the loss of his crown, are subjects of no common interest. Whether the new constitution be preferable to the old; whether the people are more likely to enjoy happiness under it; or whether the peace just concluded with her more powerful enemies is more likely to be permanent, we are not prepared to say. It is our duty at present to state, that peace between Sweden and Russia has been concluded.—Sweden has lost a considerable part of her territories and population. The reasons for these sacrifices are thus announced: "The exhausted state of the country, occcasioned by the perverse measures adopted, and obstinately pursued, by the late government, which did not warrant a hope that it would be possible for his present Majesty to obtain a favourable peace. The King's endeavours to induce his Russian Majesty to lower his demands having proved fruitless, he directed his ministers to sign a peace, by which, valuable possessions are severed from Sweden. In so doing, his royal Majesty has merely consulted the urgent wants of the realm, speedily to obtain tranquillity and repose, after a destructive war, which had exhausted all its resources." This declaration, however necessary it may have appeared to those by whom it was written, with the view of reconciling the Swedes to the sacrifices which have been made, amount, in our opinion, to a direct invitation to require all that is left; and we should not wonder, if even in our times Sweden should be added, and Denmark likewise, to the already too unwieldy empire of the autocrat of all the Russias. If the Emperors of the East and the West do not quarrel before their plans are carried into execution, "the child may rue that is unborn" the fatal interview of Alexander and Bonaparte which led to the treaty of Tilsit. Little as we are disposed to pity the sorrows of the *Pope*, we cannot but lament the misfortunes of the *Man*. We cannot but feel, that Pope Clement, besieged in the castle of St. Angelo by Charles V. feeding upon asses' flesh, or even surrendering to that prince, and in custody of Alencon, still possessed a greater power of resisting the will of his conqueror than the present successor of St. Peter now in the hands of Buonaparte. The head of the Church, once so formidable to all the powers of Europe, though he disdains to crouch at the feet, is yet at the mercy of the man who calls himself "Reformer of the Catholic Religion." We do not wish to see Europe again exposed to the evils consequent upon the dominions of priests, but we cannot observe the indignities offered to the head of that church, without heaving a sigh in favor of fallen greatness.

Our Readers will observe, that the article respecting Col. Wardle, which anticipated the result of Mr. Serjeant Best's application to the Court of King's Bench, was written before the argument took place which confirms our opinion.

THEATRICALS.

THE range of the dramatic critic is at present very circumscribed; a little incommodious, make-shift building, never intended for the performance of regular dramas, and scarce fit or worthy to be the playhouse of the paltriest manufacturing town, is now the only place, in this vast metropolis, where they who love the amusements of the stage can go to see a play; and to this place, consequently, must the observations of those, who undertake to give an account of dramatic entertainments, be confined. To decide on the merits of the strange performances which are nightly exhibited at the new theatre in Covent Garden is reserved for the august tribunals of Westminster-Hall, the Sessions-House, and Bow-Street. Prize-fighters have usurped the place of critics; and arguments of mere brutal force are not to be combated by the light weapons of Taste. We have so little accustomed ourselves to contemplate the possibility of the servants of the people becoming their masters, that when we see the people dragged nightly to prison, with the utmost violence and ignominy, and hear of criminal informations filed against them for daring to oppose this new-sprung power, we are so lost in wonder, that we scarce know which most to admire—the insolence of those who dare to commit such acts, or the patience of those who submit to them. That the people can endure this patiently, and that no insults, however gross, (and grosser than have been offered cannot be,) can provoke them to the commission of illegal outrage, reflects much honour on their judgment. It is true that the oppression and insults of the base are, above all other degradations, most vile and infamous; but by any indiscretion to give any degree of colour for such tyranny, or occasion for its aggravation, would be folly. With such matters, however, we meddle not. We confess that we cannot think of them with the coolness which their importance demands: our blood boils, and every nerve quivers with indignation, when we think that a *playhouse* exists, with an exclusive patent to insult the liberties of Englishmen: but it is to be hoped that it is in a *playhouse* only, if there, that they are to be insulted with impunity, because the people will still be able to avoid the insult, by avoiding the *playhouse*. We will therefore not trouble ourselves to enquire into the truth of the affidavits which have been made, or how far they coincide with the former statements of those who have sworn them; nor will we endeavour to solve the enigma of a conspiracy existing between the persons who have never had the least communication with each other. We leave these things to the decision of an English jury; begging that jury, however, to remember how much may be involved in their decision, and the power which is in their hands.

For the present, and until peace is restored at Covent Garden, or until the completion of the *New Subscription Theatre*, on which the hopes of all lovers of the legitimate Drama are now intently fixed, we must take our station at the LYCEUM.

Here we have to notice the production of a new Farce, entitled, *Not at home*, written, we understand, by Mr. Dallas, the author of some well-known novels. We were present at its first representation, and are able to vouch for the truth of the statement made in some of the Papers, on the succeeding morning, that "the audience appeared completely tired of the piece before its conclusion; and that the disapprobation was so strong when the curtain fell, that Mr. De Camp was not permitted to announce it for another representation;" and yet the play-bills of the same day announced that "the new Farce of *Not at home*, performed, for the first time, last night, was received with *marks of approbation, and reiterated bursts of applause*, from all parts of the Theatre, and will be

repeated *every evening this week.*" So little value do the managers of our theatres attach to public opinion, and so little pains do they take to conceal their contempt of it! It is not worth while to enquire what distinction there is between marks of approbation and reiterated bursts of applause, when there is as little truth in the one as the other. The falsehood of these men is only to be equalled by the effrontery with which they set the public opinion at defiance, in the impudent announcement which they make of their determination to perform the piece every evening of the week, whether the public approve of it or not. A little more humility would be better suited to the poverty of their tenement and its furniture.

As for the Farce in question, it is scarce worth while to waste a comment on it. Its whole humour turns on the preposterous jealousy of a new-married man, who excludes from his house all his friends, for fear they should make love to his wife; and has none but ugly servants, for fear his wife should make love to them. The frightful ugliness, however, of one friend, is thought a sufficient antidote to desire on the part of the wife, and he is admitted. This friend, *Spectre*, is personated by Matthews; and by tying up his nose flat to his face with a piece of pink silk, covering his own eyebrows, and making others half an inch higher on his forehead, and with the aid of a wig furnished with enormous whiskers, he certainly contrives to place himself on a level with any ouran-outang that has yet been exhibited at Bartholomew Fair. But we confess we are at a loss to discover the wit of this, or the merit of the author, who depends entirely on the ability of the actor to convert himself into a baboon. The audience appeared no less at a loss; for though the house was full of the author's friends, who were boisterous enough in his support, even they could not force a laugh into his service. The actors, however, did their utmost, particularly Matthews, Melvin, and Mrs. Orger. We were sorry to see them in such parts.

Before this Farce, Mr. Arnold's Play of *Man and Wife* was performed—a piece, containing many good points, but a much greater portion of defects. We mean not, however, here to enter into an examination of its merits.

As the situation of affairs at Covent Garden may seem to be very unpropitious to the *debut* of any new candidate, we find one bold enough to brave all "this rocking of the battlements," in addition to the natural difficulties of a first appearance.—The lady's name is Clarke, a native, we understand, of Manchester; and although not more than twenty years of age, has been for some years conversant with the drama; often, as the address on the night of her entrè announced, "been hailed by Fame, upon provincial ground." Than this address, intended as propitiatory, nothing could be more injudicious—it was spoken by Mr. Cooke, and the very first line completely interrupted the temporary composure into which the expectation of a new tragic actress had lulled the audience. It began

"Though hostile rage so long within these walls,"

and instantly an universal groan informed him that its temporary suspension by no means foreboded that it would not continue longer. He, however, got through this *propitiatory* address, without inflaming hostility so much as to prevent a very favourable reception of Euphrasia, which was the part Mrs. Clarke chose for her first appearance. This character is well adapted to the display of theatrical talent: there is much declamation throughout, and many opportunities for a display of tender and tragic powers. Mrs. Clarke was by no means equal to a delineation of it—her declamation was rant—her tragedy, bombast—and her tenderness more affected than affecting. This criticism of a lady's powers may be considered rather ungallant; but if censure was to be restrained by politeness, the drama might be monopolized by imbecility. Polite, or unpolite, however, as it may be, we cannot help declaring, that in our opinion Mrs. Clarke has totally misconceived her talent, if she supposes herself capable of sustaining the higher walks of the drama. At best, she is only

qualified for the fourth or fifth rank.—Tragedy requires something more than the familiar toss of the head, or the strut, however dignified, of consequential incapacity. The play itself was well got up, and owed much of its interest to the splendour of its decorations, and the classical accuracy of its costume.

The Lyceum Theatre has been more fertile in novelties, as well as more judicious in their selection.—The loss of a great part of its force renders this indispensably necessary.—The loss of such performers as Braham, Elliston, Mrs. Jordan, and Bannister, cannot be easily supplied. The first candidate for the vacant chairs of Elliston and Bannister was a Mr. Wrench, from the Theatre Royal, Bath.—It was a bold attempt, particularly when the merits of both these gentlemen were fresh in the public recollection. To say that Mr. Wrench succeeded to the extent of his ambition, would be untrue; to say, however, that he did not evince very respectable pretensions, would be unjust. *Belcour*, in the comedy of the West Indian, was the part in which Mr. Wrench first appeared upon the London boards—it was the one, too, in which, perhaps, Elliston's talents shine most conspicuously—his levity as the young man of fortune, his occasional bursts of feeling, and the easy demeanour of the gentleman, which characterized his whole performance, admitted of no superior.—To follow such a delineation was difficult; and for a first appearance, in the highest degree dangerous.—In such a situation, to say a performer did not fail, would be praise.—Mr. Wrench is, however, entitled to an higher encomium. His acquaintance with the public gave him a confidence, and his intimacy with what is technically termed *stage trick*, a facility, in which new performers are generally deficient.—The pronunciation of Mr. Wrench is, however, often confused by a rapidity of utterance which so drowns the expression as to render it frequently inaudible; and he bustles too much during the scene, as if determined that the quickness of his motion should keep pace with that of his elocution. These are faults which a little attention may easily correct, and were, perhaps, acquired in a country theatre, where, as he was of course always the hero of the company, he might have conceived activity to be a principal and indispensable requisite for the support of his consequence.

Even these faults were virtues in the next character in which he appeared, (*Tristram Fickle*, in the farce of the *Weathercock*,) a character remarkable only for its extravagance. Here his rapidity was natural—his bustle necessary; and, whatever would have unfitted him for any other part, eminently useful. The impression which he made on the house was in the highest degree favourable, and Tristram added to the laurels of Belcour. In one instance he was singularly successful. After having tried a number of professions, and in the variable humour of his character renounced them all, almost as soon as he had undertaken them; at length he determines to become a soldier, and to emulate the great names of ancient and modern times.——"Alexander, Hannibal, Cæsar, (says he) those are great names——Fabius, Abercrombie—*Moore!*" On his pronunciation of this last name, whose blood is still fresh upon his laurels, Mr. Wrench paused, advanced to the front of the stage, his hands clasped in sorrow, and with an expression of mingled admiration and regret upon his countenance. The effect was electric, and three distinct peals of applause from the audience testified their tribute to the hero, and approbation of the actor. There was an evidence of mind in this incident, for which we are willing to give Mr. Wrench the greatest credit. Upon the whole, there is little reason to doubt that he will prove a valuable acquisition to the Company at the Lyceum.

Soon after the success of Mr. Wrench, another candidate for public favor appeared at this theatre, in the person of Mrs. Edwin, from the Irish capital. The metropolis has not for these many years witnessed a more successful *debut*, owing, perhaps, in some measure, to the interesting appearance of the *debutante*. Amateurs have lamented the secession of Mrs. Jordan as an irreparable loss to the drama, as if they could be

unconscious that the monopolizing system hitherto pursued by the Managers had deprived the town of amusement fully equivalent to what even her talents, however great, might produce. Of the truth of this, a more striking example cannot be given than the absence of Mrs. Edwin for such a length of time, from these boards. The character in which this lady first appeared was one in which her talents could have little scope for their exertion; but she contrived to render it interesting—namely, the *Widow Cheerly*, in Cherry's *Soldier's Daughter*. The comedy itself is one of those modern milk and water productions, of which "*the less is said, the better.*" In this insipid production, Mrs. Edwin did all that could be done for the character she represented—she rendered it tolerable, and thereby evinced as much talent as even a more interesting part could have afforded her an opportunity of displaying. Mrs. Edwin is in person small, but elegantly proportioned, with a manner rather fascinating; her eye possesses an archness which gives an exquisite grace to its expression, and that expression pretty generally anticipates her utterance. She has much of the *naïveté* of Mrs. Jordan, and produces all the effect of Miss Duncan's acting, without her apparent exertion. It is in the part of *Beatrice*, in Shakespear's admirable comedy of *Much ado about nothing*, that this actress appeared to the greatest advantage. The play is calculated to call forth the best powers of the actor; and perhaps had its author left no other monument of his fame, it would alone have rendered him immortal. This play is a specimen of the purest comedy, and contains two of the most highly-coloured, yet natural and well-supported characters, that ever dramatist drew, or comedian personated—the witty, gallant, polished Benedick, and the sprightly, innocent, and captivating Beatrice. The first of those characters has had no adequate representative since the days of Garrick, and we fear that it will be long ere we shall look upon his like again.

"Ages elapse ere other Tullys rise."—

Mr. Wrench was however respectable; but Beatrice—the living Beatrice, with all the graces in which its author clothed her, stood before us in Mrs. Edwin. The archness of here allusions, the point of her replies, the witty playfulness of her raillery, produced a lively effect upon the audience. In the defence of her friend Hero, Mrs. Edwin was particularly happy—there was a sudden transition from the usual levity of her demeanour, to the serious and dignified assertion of her friend's innocence, which could not be outdone.——Her delivery of the following passages absolutely astonished the house, and drew down almost involuntary applause.

"*Benedick*—Is Claudio thine enemy!

"*Beatrice*—Is he not approved in the height a villain, that hath slandered, scorned, and dishonoured my kinswoman?—Oh! that I were a man! What—bear her in hand until they come to take hands, and then with public accusation, uncovered slander, unmitigated rancour—Oh God! that I were a man—I would eat his heart in the market-place.

"*Bene.*—Hear me, Beatrice——

"*Beat.*—Talk with a man out at a window—a proper saying——

"*Bene.*—Nay, but Beatrice—

"*Beat.*—Sweet Hero—she is wronged, she is slandered, she is undone.

"*Bene.*—Beatrice—

"*Beat.*—Princes and Counties! surely a princely testimony—a godly count-confect—a sweet gallant, surely! Oh that I were a man, for his sake! or that I had any friend would be a man for my sake! But manhood is melted into courtesies, valour into compliment, and men are only turned into tongues, and trim ones, too. He is now as valiant as Hercules, that only tells a lie and swears to it.——I cannot be a man with wishing, and therefore I will die a woman with grieving!"

Her expression of joy and gratitude to Benedick, when he promises to challenge Claudio, was very fine. From even the short specimen of the character which we have selected, the reader will see how very liable it is to be overdone by an unskilful actress. We cannot, however, lavish un-

qualified praise upon Mrs. Edwin. Her acting is mixed with a great deal of alloy. Indeed we do not think so highly as we had been taught to do, before we saw her, by the encomiums of her friends. We never can forget that she is acting. She sometimes appears to mistake vulgarity for archness, and a boisterous, romping, tomboy kind of style, for spirit. We do not know whether her high-heeled shoes throw her too forward, but we are in constant apprehension of seeing her fall on her face: she might avoid the danger, perhaps, by learning to stand a little *quieter* on the stage. She has a great deal of talent, no doubt; but she has many faults, and we fear that some of them are too deeply rooted, by long practice in provincial theatres, to be easily eradicated.

We cannot take leave of this play without remarking how wretchedly almost all the characters are cast, except those of *Beatrice*, *Benedick*, and *Dogberry*.—Mrs. Orger was, however, respectable as *Hero*, but *Claudio in the hands of De Camp!!*——We will not begin to censure this, for *words would be wanting*.

The late happy celebration of the Jubilee occasioned the production of a new piece at each of the theatres.—They are little more than complimentary expressions of loyalty suited to the occasion, and do not deserve to out-live it.—We cannot, however, avoid noticing the liberty taken at the Lyceum, of introducing into a *new* piece a parcel of old songs. The last scene of the *Jubilee*, at Covent Garden, exhibiting the naval and military glories of the reign, with commerce, the arts, sciences, and manufactures, was well conceived, and extremely splendid.—Mr. Kemble, however, should have directed the chariot of the Arts to have been introduced by more appropriate guides than greasy scene-shifters, and lamp-lighters with their dirty hands and blue worsted stockings.—Even Mr. Brandon might have been more profitably employed for such a purpose, than in administering to the pride and avarice of a manager, or studying law at Bow-street.

But we trust these disgraceful scenes are now drawing to a close; that the Managers will soon make the *amend honorable* to the public; and instead of applying irritants and caustics to the wounded feelings of the people, will apply to that public, by whose favor they exist, for an indemnity for the past, upon giving security for more appropriate conduct in future.

A NEW CARRIAGE.

THE THORNTON JUBILEE SPORTING LANDAULET.

(With a Plate.)

THE plate represents a carriage built by Mr. C. L. Birch, of Great Queen-street, for Col. Thornton, whose loyalty as a soldier, whose knowledge as a sportsman, and whose taste as a gentleman, are so well known. The Thornton Jubilee Sporting Landaulet may therefore be considered as the result of all those characteristics by which the liberal Proprietor is distinguished. We therefore conceive that we shall be the means of affording pleasure to the fashionable world, by introducing it to their notice and admiration.

This carriage answers the purpose of the following carriages: a Landaulet, Post-shariot, Barouchet, and Phaeton; carries six persons, besides two or three children.

The introduction of this novel mode of hanging the body, and singular connection of the double and eliptic springs, convince the eye, at once, that a perch would be superfluous; consequently the carriage acts as a crane-necked; and, from the unique shape of the body, becomes shorter than the generality of light phaetons. The interior of the body forms a bed; the exterior appearance is equally even on the roof and sides as a chariot, having no ribs or hoopsticks visible; and is so contrived, that the spring-curtains act without lines, and fall back with the head. An imperial can be placed on the roof, so as to remain when opened. A barouche seat is placed before, to be removed occasionally; and a concealed seat behind, to carry the servants in travelling, which forms the lid of the boot, and is contrived not to interfere with the trunk or luggage that may be placed in the interior; and, when closed, admits of an imperial on its top. A similar boot is before, which admits of the same or other imperials or trunks as go behind. These two boots have wells to receive drop-in-trunks; and when the trunks are removed, may be used to carry dogs.—Springs, connected as these are, (acting with or without each other), prevent the possibility of the carriage turning over, should either spring break; and are checks to each other, so as to prevent too much motion.

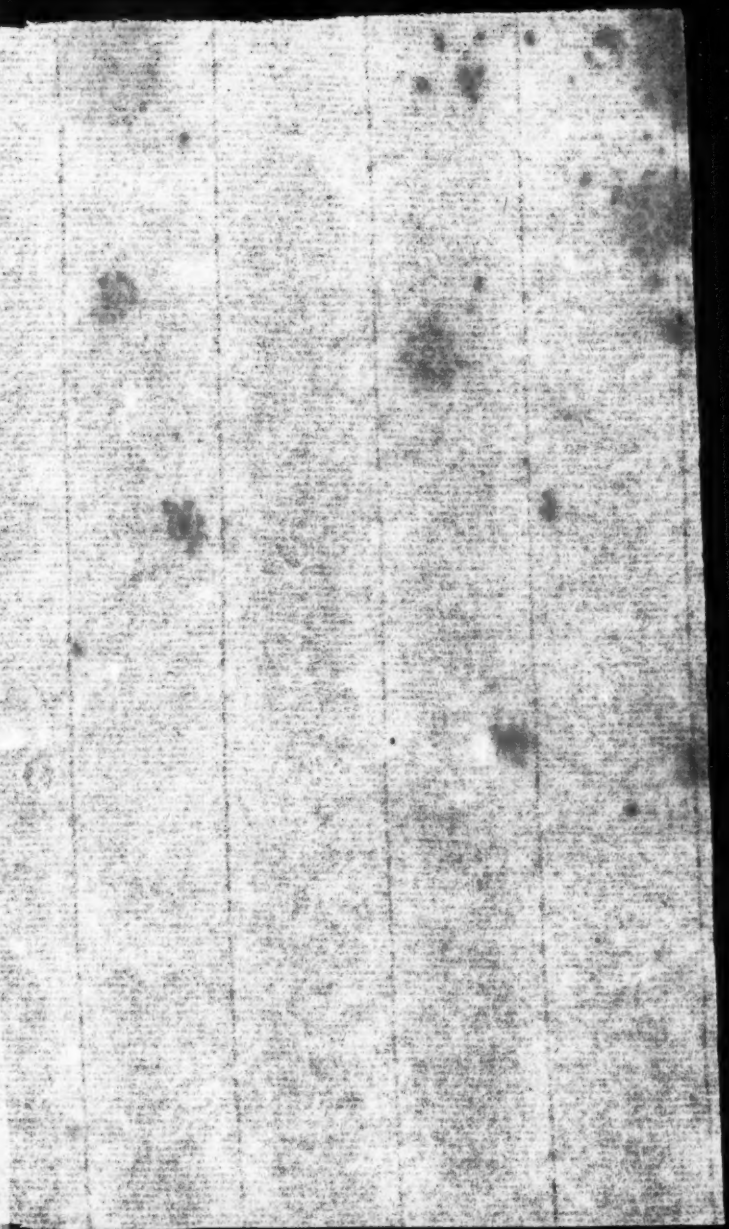

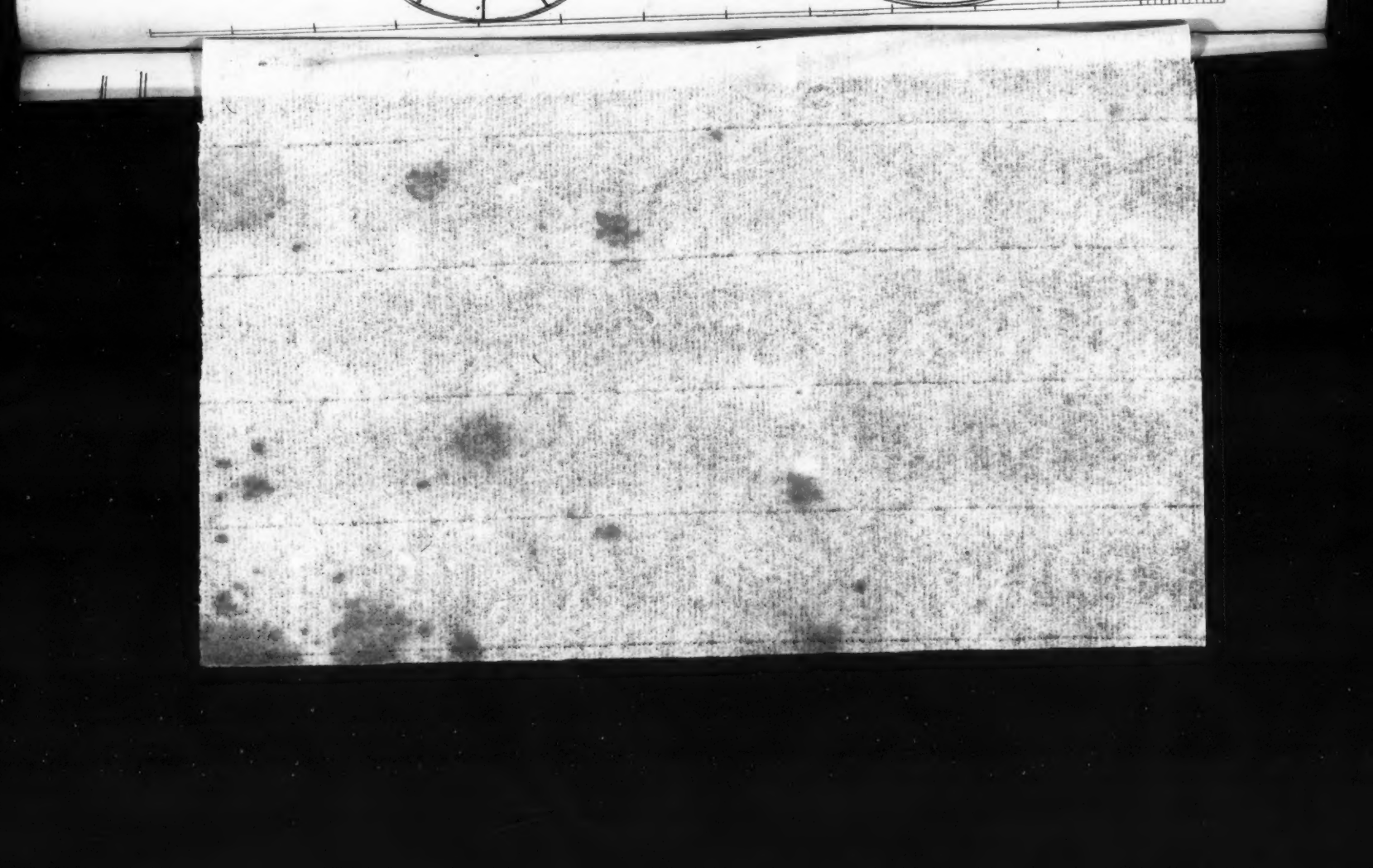

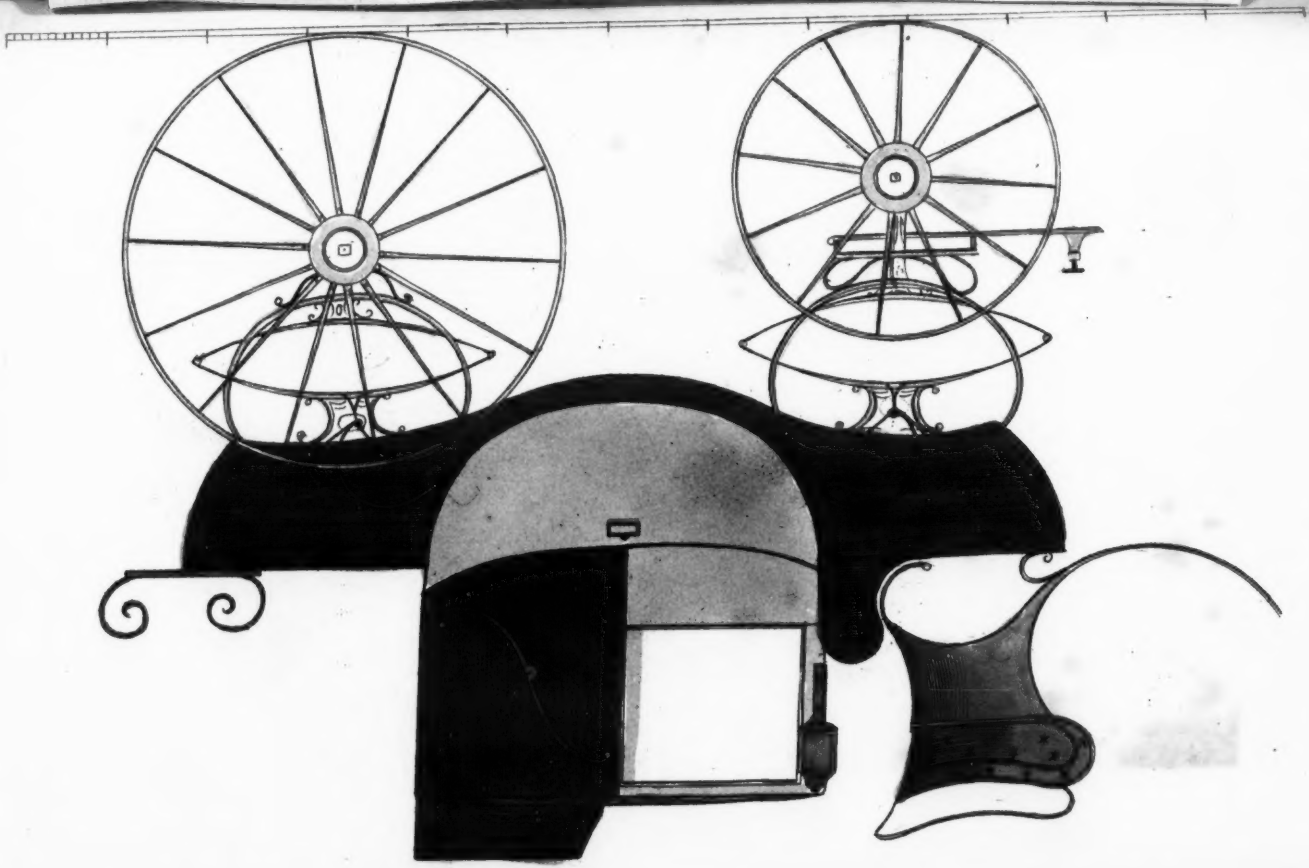

MONTHLY AGRICULTURAL REPORT,

FOR NOVEMBER, 1809.

It affords us peculiar pleasure to be enabled to state, that since our last agricultural remarks, the weather throughout every part of the kingdom has been more genial to the efforts of the husbandman than for the two preceding months. Our readers will find an accurate statement of last harvest's produce by a reference to the 7th Number of the Beau Monde, published in October; and since that period, the farmer has continued his assiduous exertions at this most important season. Rapidly as the progress of *Wheat Sowing* has advanced, (speaking generally,) yet on very light and some stiff soils the want of rain occasioned delay, and in a few instances, on the former lands, it has been deemed requisite (where the grain was very early deposited) to sow more, lest the crop should not be sufficiently productive.—There are not many districts throughout the kingdom but will finish in the latter end of this month.—In Norfolk, more than two-thirds of the ensuing crop are in the ground. The same remark applies to Suffolk, and in both counties the early-sown wheats have a promising appearance.—In Essex, the farmers are much backwarder, having waited for rain.—In Wiltshire, this branch of husbandry has been well effected.—From Warwickshire the same favourable report is received; and likewise in the East Riding of Yorkshire, with the exception of some of the fallow lands, which were too tenacious to admit the plough, but, on receiving moisture, would work in fine order.—The Sussex farmers, in the last week of October and the early part of this month, prepared their lands for Wheat-sowing, and they have made considerable progress, considering the want of moisture which they had experienced.—In Kent, the same complaint arises, and the season in that county will terminate very late; but on the low Wheat lands there, the necessary labour has been well conducted.—In East Lothian, the heavy lands had previously been so saturated with wet, as, when turned up with great difficulty by the plough, not to admit of separation by the harrow; and had not a change of weather occurred, none of the clay soils could have been worked. On some farms a plough was not yoked for the space of ten weeks, and consequently all work is very backward; but on lighter parts, the Wheat Seed has been tolerably well got in. These are observations generally applicable to those other counties which have not been particularized.—Here it may be proper to note, that *experience* has established the belief, that the *firmer* the land in which Wheat is sown, the better does it flourish, and the more effectually will it resist the MILDEW. Consequently, where lands are lighter than could be wished, to render them more fertile, and secure from such a fatal disease, rolling with heavy weights has proved of the greatest service; and where the *broadcast system* is pursued, the previous pressure of the iron ring-roll will be found extremely beneficial. For this reason, the DIBBLING SYSTEM must be preferred, (where it can be adopted,) to that of the *Drill* or the *Broadcast Husbandry*, as the process of dropping the grain, occasioning the treading of the numerous attendant labourers, renders the surface of the land more compact, and the pressure of the iron dibbles below the surface has there a similar effect, giving stability and vigour to the vegetating kernel. An experiment two years ago was made by a Norfolk farmer, who dibbled and drilled some Wheat on a Clover Layer; but the *former* was the best, and both *escaped* the mildew. In the *same* field he ploughed and harrowed an acre till it was quite pulverized and loose, like a fallow, and every inch of land was so much *injured* by the mildew, as scarcely to be worth the reaping. Many

similar instances could be adduced; and it ought also to be remarked, that the *early-sown* Wheats are less affected by this devastating power.—The crop of wheat of last harvest certainly has proved very deficient both in quality and quantity, and, in many districts, it has been greatly affected by the smut or brand. The most sure *preventive* to this disease is to take *four gallons* of *strong ley*, and place over a fire till they boil, and then put in *six ounces* of *arsenic*, stirring them with a stick about five minutes, taking care that the liquor does not run over; let it remain till cold, and then putting a small quantity in a water-pot, and having laid on a *brick* floor three bushels of Wheat, or any less quantity, thinly spread, sprinkle; and having very carefully turned it over, moisten the other side, till all the grain is moderately wetted; and some *slacked lime* being sifted on, the seed may be immediately used. In turning over the heap of Corn when wetting, the floor around ought to be swept towards it, that no dry kernels may escape the moisture: for if a smutty ear be found in a field where this process has been tried, that cause has produced it. The four gallons of this liquor will be sufficient to cure *three* coombs of Wheat. No other method has yet been esteemed such a certain preservation; and steeping the Corn in any other liquid answers not the purpose, except the *arsenic* be boiled with it. Adjoining fields have suffered most lamentably from the smut, when those alone escaped its direful effects where the *poison* was infused into the seed. This fact proves the baneful disease to originate from the *kernel*, which is impregnated with *animalculæ* that the *arsenic* destroys before they are able to injure it, and which injury is retained in the blade, and ultimately withers its fruit. The animalculæ most probably are produced in the kernel by some *oviparous* insect, (too small to be visible to the naked eye, and perhaps not to be discerned even by a glass), which deposits its eggs in the grain, or they are naturally brought forth in the process of vegetation which the kernel experiences; and when that has imbibed the destructive influence of the *arsenic*, either the oviparous insect is soon destroyed, or the *poison* prevents its being brought into life. As we know how it operates on the human frame, this analogous effect is natural. If the disease were generated by any *after-cause*, when the green shoot appeared vigorous, when the ripening stem and blossoming ear were rapidly advancing to perfection, in that distant period, and in that remote stage of its growth, the fatal powers of the poisonous infusion on the plant would be of little, or, indeed, no avail.

But to return to the most original object of this Report—The price of Wheat has advanced beyond that standard which at one time was believed probable. The markets have fluctuated but very little within the last month; nor can we perceive any early prospect of much alteration, for there is very little old corn in the hands of the growers, nor does it appear likely that we shall be able to obtain foreign supplies.

We can now speak with more certainty of the Barley crop, as much has been thrashed, and offered to sale. In Norfolk, Lincolnshire, Yorkshire, at Newcastle, and indeed generally at all other markets, the bulk of the samples has been *scarcely saleable*, being very damp, and discoloured, unfit for shipping, and malting.——The price, for grain of that description, of course is very low; but those samples which are bright, and deserving the attention of the brewer, are eagerly sought after, and are worth from 52s. to 53s. per quarter.

Malt is selling at 10s. 6d. and 11s. per bushel.

Oats have come to hand in better order than Barley. They continue pretty steady in value, selling at from 32s. to 36s. per quarter. Those of a prime quality are much in demand.

Beans, in a great many districts, have proved very productive; and in most others may be deemed an average crop. Those which are dry and good, sell high.

Peas, for boiling, which varied extremely in various places, are selling at 5l., and Grey ditto at 2l. 14s. per quarter.

Tares have podded well, and are worth from 7s. to 8s. a bushel.

Potatoes have been housed in good order, except on very wet soils, and the average price has not yet been more than from 3s. to 4s. a sack.

Mustard Seed, at Wisbeach, has fetched 18s., and prime samples 21s. per bushel.

At Liverpool, the country demand has lessened for Butter, and rendered that article dull of sale there, with an expectation of a still farther declination in price. Coleraine is worth 117s. Derry, 110s. Belfast, 118s. Newry, 114s. to 115s. Drogheda, 110s. Dublin, 109s. to 110s. Wexford, 110s. Cork, dry, 110s. and Limerick, 110s. per cwt.—At Hereford Fair, the supply of salt butter was large, and was chiefly bought up before dark, at from 13s. 3d. to 14s. 6d. per stone.—At Swaffham and Downham, the price is 48s. per firkin of 56lb.; and at Yarmouth and Norwich market, the pint (of 20 ounces) of Butter is sold at 1s. 8d. and 1s. 10d.

In Leicestershire, Cheese, from the best dairies, has fetched from 75s. to 80s. per cwt. of 120lb.—In Lincolnshire, ordinary Cheese has been sold at 5s. and 6s. per stone. Fine new milk ditto, 78s. to 84s. per cwt. —In Herefordshire, the best making averaged from 70s. to 80s. and two-meal, from 60s. to 70s. per cwt.; but of this article there was a heavy sale.—In Hampshire, the price of old cheese is 4l. to 4l. 10s. per cwt. New, from 3l. to 3l. 10s.—In Norfolk, that of one meal is 9d. per lb.

Onions are worth from 10d. to 1s. 4d. per peck.

There have been but few sales of Hops in Kent. New bags from 4l. 16s. to 6l. 6s. and in Essex, 4l. to 5l. 5s.—In Sussex, the price has been from 4l. 10s. to 6l.—At Worcester, the current prices have been, new Hops, from 4l. to 4l. 15s. and old, from 4l to 5l. 5s. per cwt.

Cabbages promise abundance of seed, and Coleworts look remarkably well.

The Turnips have improved greatly since the last rains, attaining to a dimension in the apple and size of the leaf which hitherto had not been considered at all probable. We cannot too strongly recommend the Swedish Turnip, that withstands the severity of the frost, is not liable to be injured by the bite of game, and retains its nutritious qualities longest in the Spring. In Bedfordshire and Norfolk, more especially, has this valuable root been cultivated. Mr. Lindley, at the Nursery at Catton, near Norwich, during a period of several years, with the most laudable industry, has paid the greatest attention to the best sort. During the last month he has employed *sixty men* in transplanting twelve acres purposely for seed. Good Turnips, to be consumed on the land, have been readily sold at ten guineas per acre; but where drawn, and particularly in the vicinity of large towns, to cow-keepers they have fetched higher prices.

Scotch Cattle, and indeed all lean beasts, continue to sell very dear at the fairs and markets. At Morpeth, November 1, there was a very short supply; also at Worcester, the 6th, and at St. Simon and St. Jude fair, (Stamford,) on the 9th, the buyers could not obtain a sufficient quantity; and at Bristol, on the same day, there was but a thin show.—At Hampton Green, Fakenham, Norfolk, on the 16th November, one of the largest fairs in the kingdom, there was by no means so large a quantity of Beasts as is usually exhibited there. The demand was *unprecedently* great, and the graziers purchased at higher prices than they were ever remembered to have done.—At St. Faith's Fair, near Norwich, the quantity has not been so great as in former years, but still there has been enough for the graziers; and likewise every week, at Norwich Hill. At the latter place, and at Setch market, in the same county, *fat* Beef lately has not fetched more than from 8s. 6d. per stone (of 14lb.) to 9s.; but at Kelso, 10s. 6d. has been given; and at Morpeth also, fat Beef was in great demand.—At Stamford fair, however, it sold very heavily.—In Wiltshire, both fat and lean Beasts have gone off rapidly, at very high prices.—At Coventry fair, the 1st, there was an abundant supply of Cattle, which sold very readily; and at St. Luke's, Newcastle, the preceding day, Store Cattle were eagerly bought up. —Hereford fair had a collection of Oxen

beyond most former instances, and those in forward condition sold readily at fifteen per cent. above last year's prices.—At the Hereford annual Agricultural Meeting, an Ox, bred by Mr. Hudson of Hom-Lacy, fed with grass and hay, without the smallest aid from oil cake, turnips, or any artificial food *whatever*, was exhibited alive, and weighed 1 ton 4 cwt. This bullock is the property of his Grace the Duke of Norfolk.

Store Sheep have been brought to market in large quantities, but yet they seem almost always to have found purchasers. At Norwich, the beginning of the month, some half-bred Shearlings fetched 48s. per head. ——At Eastbourne fair, some fine South-down ewes, part of the flock of Mr. Willard, sold at 54l. per score.—At Coventry, the 1st, there was an abundant supply.—At Winchester, too, there was a great show, and high prices were obtained.—At Stamford, they were bought extravagantly dear.—At Maskfield, the shew was larger than has been known for many years, with a very brisk sale; and the same in Wiltshire.—Fat Mutton has been plentiful, and not sold proportionably dear to lean—from 6d. to 7d. and 7d. halfpenny per lb. being the average sum.—Lambs are also dear.—At Winchester, they sold at from 25l. to 31l. per score, and similar sums have been given in various parts of the kingdom during the last month, the South Down and Half-breds continuing the most approved.

Pigs and lean Hogs are uncommonly dear, and in some places very scarce, particularly in Wilts, and likewise at Newcastle, Bristol, Norwich, and Southall. At the Altringham Agricultural Meeting, Mr. Bolt, of Nantwich, exhibited his valuable breed of Pigs, known by the name of the new Cheshire Pig.

Horses, at St. Luke's Fair, sold high, and were much in demand. Those for the cavalry found a ready sale, and, indeed, all young horses. There were a great many dealers from all quarters of the kingdom.—At Harling Fair, cart-horses sold at from 30l. to 45l. each.—At Winchester there was a good shew, which sold very dear.—At Coventry there were a great many of the cart kind, but most of them very ordinary.—At Berwick there was a moderate shew, and consequently the prices were low.—At Harborough there were many good Horses, which fetched great sums of money; and it was the same at Kelso.—At Stamford, Riding Horses and Black Colts were eagerly bought.—At Nantwich, Mr. Bolt shewed his Suffolk Stallions and Mares with their Foals, which were greatly admired. Many of this valuable breed have been sent over to Ireland, and year-old Colts, for breeding, have been sold at 50 and 60 guineas each for that purpose.

Wool, in Lincolnshire, is from 1s. to 2s. per tod (of 28lbs.) lower, selling at from 25s. to 26s.—In Wiltshire, the prices are, best prime Wool, 75l.; second ditto, 55l.; Choice Locks, 38l.; Head, 30l.; Running fine, 23l.; Second ditto, 18l.; Seconds, 17l.: Abb, 14l.; Warp, 12l. 10s. 0d. and List, 11l. 10s. 0d. per sack of 240lbs.—South Down Fleeces are worth 3s. to 3s. 6d. per lb. and Norfolk the same money.—Kent Marsh, 1s. 6d. per lb.—Last year. Mr. Mr. Tollett's Flock of Merino Sheep produced him 505lbs. of Wool, *then* worth 4s. per lb.; and from 856 fleeces of the mixed breed of Merino Rams and Ryeland Ewes, he had 3,373lbs. of Wool, worth at *that* time 3s. per lb.—When the enormous price of Spanish Wool is recollected, in consequence of various circumstances connected with the war, there cannot be a doubt that it is the interest of the manufacturers and graziers in England to promote the growth of it at home. The nation, from the nature of the present contest with France, is subjected to the risk of restrictions (within the power of the enemy to impose) that, in all probability, will suspend the woollen manufacture, which derives its most valuable material from France. It certainly is practicable to produce fine clothing Wool in this country by the improvement of our own flocks with the Spanish Rams now in our possession.—We are happy to notice the following miscellaneous facts. The Sussex Agricultural Society has most humanely and wisely given liberal sums to labourers and the widows of labourers, who have

brought up and supported, to the age of two years and upwards, the greatest number of children (within the last fifteen years) in habits of industry, with *least* proportionate relief from the parish. Also to wives or widows of labourers, who have done the most work in husbandry within the year.—Rewards are also given to the poor for the encouragement of similar habits, tending to promote industry, health, and an amelioration of their present condition.—The Bedford Society has presented Samuel Whitbread, Esq. with their first prize, an elegant silver cup of considerable value, for having ploughed *half an acre* of land, within the short space of *three hours*, with a Norfolk double-wheeled plough, with only *a pair* of horses, *without a driver*. To William White, labourer, four guineas, for having brought up seven children without parish relief; and the same sum to James Telford, labourer, for having worked *forty-two* years, without interruption, on one farm.—At Liverpool there has been an association formed for the very humane purpose of suppressing the cruelty so commonly inflicted on animals. The first object of their concern is to notice the *overloading* and ill-treatment of cart-horses and other horses of draft and burden.—That eminent agriculturist, Sir John Sinclair, Bart. the President of the Institution in London, with that activity and incessant assiduity which have rendered him so valuable a member, not only only of the Society which flourishes unprecedently under his directing hand, but also to the community at large, during the Summer has been making a tour through the greatest part of Scotland. Sir John has been visiting the most intelligent practical farmers in that division of the kingdom, from whom he received, and to whom, in return, he communicated a variety of important information, relating to improvements in husbandry. In a circular letter, the noble President has detailed the objects of his research, and solicited their answer to a series of questions. The *peculiar* wish of Sir John Sinclair is, to collect every degree of information, to draw up a treatise on the system of husbandry adopted in Scotland, by means of which the farmers there are enabled to pay *doubly* the rent for the land they cultivate, compared to land of a similar quality and quantity in England; he being deeply impressed with the idea, that the introduction of such a system into England, would render the *British* empire *independent* of *other* countries for food and a variety of most essential articles. Such are the benefits arising from the formation of Agricultural Societies, composed of the most learned men we can boast, and of the best practical, liberal, and enlightened cultivators of land. Such are the most laudable pursuits which *can* engage the attentions of man—the increase of his own property, combined with the happiness of those by whom he is surrounded. To record these and similar occurrences in our Monthly Agricultural Report, we shall ever consider our duty, nor shall we spare any expence in the attainment of such information as we consider will be gratifying to our readers.

COSTUME.

Delineation of, and Remarks on, the present Style of Personal Decoration.

As the due regulation and taste of female adornment is become a matter by no means trivial or insignificant; and as a pleasing exterior, or an appearance at once elegant and prepossessing, carries with it abundant and important consequences, we shall hesitate not in future to appropriate a small portion of our Work to this favourite topic. Fashion, in this country, is so completely free from all restraint, and is left so decidedly at the will of individual invention, that we are frequently puzzled, if not overpowered, by the multiplicity of her offerings. Unshackled by the forms of *distinction* or *law*, she constructs at pleasure; and each varying whim or caprice, and each effort of invention, is

conceived and executed with the magic quickness of genius, directed only by fancy, and guided only by taste. It is thus that we see, even in trifles, the effect of that freedom and liberty which is the glorious privilege of Britons. No arrogating command *now* enjoins a compulsatory *costume*. He, who can pay for his coat, may chuse at his pleasure; and she, who has taste and invention, may exercise them at her will.—Under all these advantages, can we wonder at the rapid progress made by our females in this branch of their acquirements?

Amidst the present articles of adornment, there are none which embrace more utility, elegance, and fancy, than the Spartan Robe, Calypso Mantle, Alpine Coat, and Chinese Hat. Although there are divers other articles in this line, such as the simple plain Pelisse, Cottage Cloak, Cossack Coat, and Spanish Spencer, &c.; yet as these are not of such novel repute, nor of such elegance in themselves, we shall forbear a delineation, and confine our subject to a description of the first-mentioned; and to such remarks, as from their distinguishing particulars, come more immediately within the limits prescribed to this branch of our work.

The Spartan Robe is most tastefully adapted to the female of a commanding and dignified figure. It is formed of azure velvet, and flows loose, in the Turkish style, from the shoulders to the feet. It is ornamented with a most beautiful border of the snow-drop, composed of white velvet, traced, and blended with silver; and has a short Roman sleeve trimmed to correspond. The under-dress is a plain white satin slip, trimmed with thread lace at the feet; over which is a Grecian vest of white gossamer net, wrought in small snail-work of silver, and terminating just below the knee with a border, similar to that which decorates the robe. Ornaments of pearl and a wreath of silver jessamine, with studded leaves of green foil round the hair, which is waved across one side of the forehead, and falls in glossy ringlets on the other, fastened behind with a small comb of fine pearl. Jubilee slippers of white satin, ornamented with silver, and fan of finely-carved amber.

This dress is strikingly elegant, and particularly adapted for the higher order of full dress. Gowns are now considered exceedingly fashionable, composed of cloth, velvet, double shot sarsnet, and spotted jubilee silk. They are cut high in the neck behind, and rounded nearly to a point in front of the bosom, from whence, to the feet, they are closed with gold fillagree buttons of the cone form. The sleeve to these robes are often worn long, with cuffs of antique lace, and a double frill of the same round the neck, which is otherwise ornamented with a border of gold embroidery. When the sleeve is short, it is usually formed in the melon, or Circassian style, with embellishments of gold lace. No lady appears in full, or evening dress, without an occasional shelter from positive or partial air. These appropriate appendages consist of the Pilgrim's Tippet, of satin or fur, the Gossamer Scarf, Swansdown Tippet, and Shawl of embroidered French or Chinese silk.

In the construction of Morning Dress there is little novelty. The Provincial Jacket, the cambrick tunic and petticoat, with French wraps of coloured shawl muslin, and Cottage Gowns of coloured bombazeen, are severally adopted by our fair fashionables, for the more humble order of habiliments. There is an infinite variety in Morning and Half-dress caps, hats, and bonets. They are too numerous and fanciful to admit of a particular description: yet we cannot allow the Chinese Hat, of recent and novel introduction, to pass unnoticed. It is formed in the true Chinese style, of coloured velvet, cloth, or tissue; is ornamented with black feathers, and gold cord and tassels. It possesses much singularity, and a sort of *outre* elegance, which confines it intirely to the carriage *costume*. The Calypso Mantle is an article of much tasteful distinction. The one we contemplated, was formed of spring-green velvet; it occupied in length, about three parts of the figure, was rounded behind, and flowed loose on one side, discovering a vest and long sleeve; on the other, it was long and wide, and wrapt occasionally round the person in front, or otherwise was restrained by the arm, over which it hung in

par.
full
eed-
lvet,
silk.
and
the
are
cone
often
and
neck,
bor-
leeve
elon,
its of
l, or
helter
ppro-
grim's
samer
wl of

there
t, the
French
ottage
erally
or the
There
Half-
are too
articu-
ow the
roduc-
in the
, cloth,
athers,
s much
egance,
arriage
article
one we
g-green
t three
behind,
ering a
it was
y round
was re-
hung in

EVENING HALF-DRESS.

What must I say, Mamma?

Printed for the Proprietors of the La Belle Assemblée or Monthly Register by W. Reed

picturesque folds, exposing a high military front, composed of black velvet and frogs. The whole of the mantle was lined with white sarsnet, and edged with a narrow black velvet. We have scarcely witnessed an article in this line displaying so much elegance and taste.

The Alpine Coat comprises much utility and simplicity. It is alternately formed of velvet, Merino cloth, or double sarsenet, lined entirely through with skin. The trimmings and ornaments usually consist of spotted ermine, blue fox, or sable, differing only in their adaption to the colours, or articles of which the coat is composed.—Nothing can be better calculated to defend the fair pedestrian from the effects of a winter atmosphere. It wraps completely over the chest on one side, so as to meet the gore-seam on the other, where it is imperceptibly united by small gold or steel snaps; and relieved by the loose flowing *demi-robe*, which commencing at the back of the shoulder, descends to the feet, presenting an additional wrap of defence against an occasional severity of the season. The sleeves are made very wide, and the cape pointed; the collar high, and rounded, with a double plaiting of scallopped lace on the inside, so as at once to form, and preclude the necessity of, a frill for the throat. The great comfort and appropriate qualities of this useful garment will not fail to produce it a distinguishing place among the fashions for the winter. The waist is by no means increased in length, except by a very few eccentricks, who court attention by the adoption of singularities; and the bosoms and backs of full dress robes are, we think, considerably advanced; still, however, the shoulders are much exposed.

The long train seems quite exploded. Many Evening Dresses are worn of a walking length, and *none* exceed the short, or *demi-traine*. Sandals, for full dress, have been lately re-introduced; and are now seen to blend with the imperial slippers of satin or kid.

Gold and bright amber, scarlet, purple, and green, seem the most distinguishing colours for the season.

REPORT OF DISEASES

IN THE PRACTICE OF A PHYSICIAN TO A PUBLIC MEDICAL INSTITUTION, FROM THE 20TH OF OCTOBER TO THE 20TH OF NOVEMBER 1809.

ACUTE DISEASES.

Rheumatismus Acutus	4
Catarrhus	6
Febris Remittens	1
Febris Intermittens	2
Typhus	1
Synochus	3
Pleuritis	2
Scarlatina Anginosa	3
Erysipelas	1
Cynanche Tonsillaris	2
Hydrocephalus Internus	2
Gout	1
Pertussis	3
Morbi Infantiles	6

CHRONIC DISEASES.

Tussis et Dyspnœa	30
Hæmoptoe et Pleurodyne	6
Epistaxis	1
Phthisis Pulmonalis	5
Scrofula	2
Rheumatismus Chronicus	8
Lumbago aad Sciatica	3
Enterodynia	4
Gastrodynia	5
Dyspepsia	6
Marasmus	2
Diarrhœa	6
Asthenia	10
Icterus	1
Hepatilis Chron.	1
Hæmatemesis	2
Hæmorrhoides	2
Cephalæa & Vertigo	5
Hemiplegia	2
Anasarca	3

Ascites	1
Hydrothorax	1
Epilepsia	1
Hypochondriasis	2
Hysteria	1
Mania	1
Tænia	1
Ascarides	2
Impetigo	1
Pemphigus	1
Lichen	1
Scalices	1
Menorrhagia	3
Amenorrhœa	4
Leucorrhœa	2

Amongst the many pernicious effects of luxury may be ranked Gout. It is so peculiarly characteristic of affluence, indolence, and good living, that so far from the sufferer exciting compassion, he is rather envied. The disease nevertheless is highly painful; and although some people affected with it attain longevity, still it must always be regarded as indicative of premature dissolution. Its presence denotes a depraved habit of body, which, if not relieved or removed by the complaint termed Gout, would very soon deprive the patient of his existence, by apoplexy, palsy, or some other fatal disease. The old proverb is very applicable to many individuals who love indulgence:—"Si tu as la goutte, tu as à plaindre; si tu ne l'a pas, tu as à craindre." Hence, those who are fond of the pleasures of the table rejoice at the accession of a fit of the gout, after which, they may revert to their former habits with increased appetite: but each succeeding fit leaves them in reality weaker, till at length the system is unable to throw it out in the extremities, and the scene soon terminates. Where the gout is hereditary, even the strictest temperance will not always secure the patient from the complaint, tho' it will certainly mitigate the violence of the fits, and lessen their frequency. The symptoms are too universally experienced to require being enumerated; but it may be useful to enquire into the causes of the complaint, and suggest the means of prevention.

The chief causes of Gout indisputably are, a full, rich, animal diet, daily feasting, and sacrificing too freely at the shrines of Venus and Bacchus, neglecting exercise. Sometimes, even, it is favoured by watching, and too much mental excitement. Baglivi, long ago, justly remarked, "Calculus et podagra plures interficiunt divites, quam pauperes, plures sapientes quam fatuos."—Wine and fermented liquors, of whatever kind, will not alone produce gout: other causes must assist—as indolence and rich food. The preceding assertions are confirmed by facts. Women are seldom afflicted with the gout, although from their constitution and delicate system, they may be regarded as very good subjects for it. The few females who do suffer from it generally derive it from their ancestors, or from their own intemperance. The instances of either are rare. Hard-working people, even those who drink freely, seldom or never are afflicted with gout. In ten thousand cases of poor people which the Reporter has attended, not one instance of gout has occurred. The description of persons most peculiarly subject to the complaint will generally be found amongst those who lead rather a sedentary life, and indulge in the practices before alluded to, for a series of years; the disease seldom appearing before the age of thirty-five, when full time has been allowed for the system to undergo an entire change.

PRINTED BY JOHN TYLER, RATHBONE-PLACE, LONDON.